ELESTA
building automation

Room Control Unit

RCO ER440A00

Contents

Keys / Display

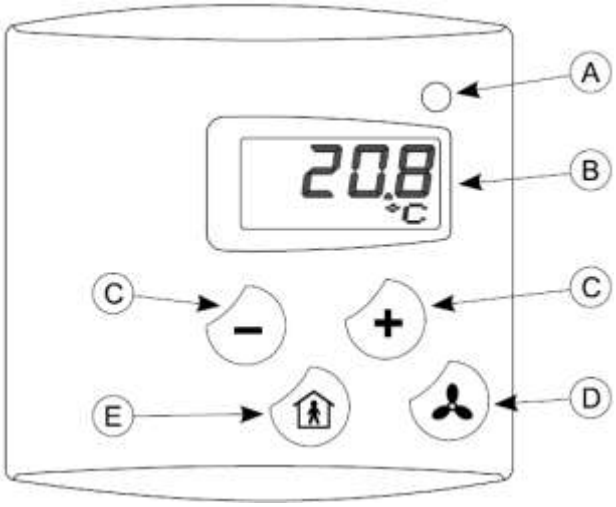

A LED
- Green: Cooling
- Red: Heating

B Display
- Temperature / Set point
- Fan stage

C Set Point Adjustment

D Fan Control
- 0: Off
- 1: Stage 1
- 2: Stage 2
- 3: Stage 3
- A: Automatic

E Occupied Button

Jumpers / LEDs

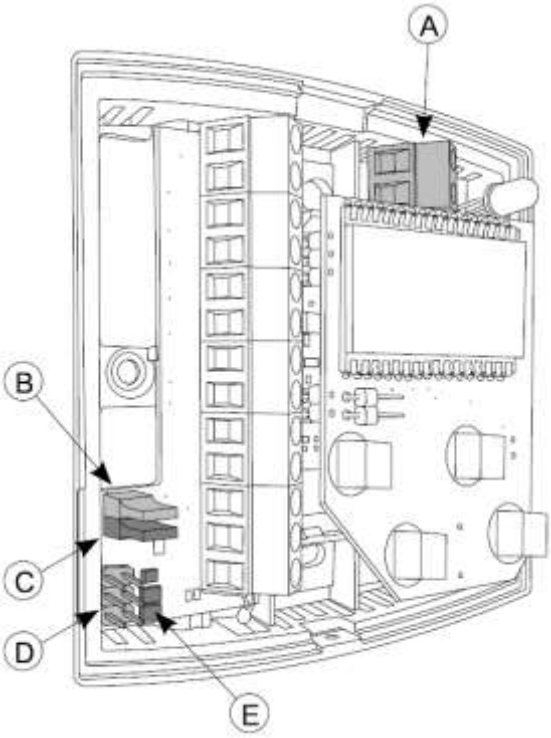

A Connector for external temperature sensor / digital contact

B Bus termination (120 Ω)
- Closed: Terminated
- Open: Not terminated

C Configuration
- Closed: Configuration mode
- Open: User mode

D Connector for Setup Tool

E LEDs
- Green PWR: Supply power OK
- Yellow TX: Controller transmits
- Yellow RX: Bus activity

Assembly Information

Device can be fitted with screws on inside wall (IP20) or a junction box. Suitable fitting information is shown on pictures above.

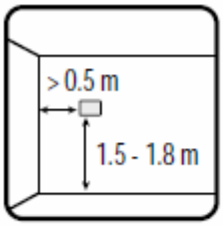

Suitable fitting dimensions (height and minimum distance from corner.

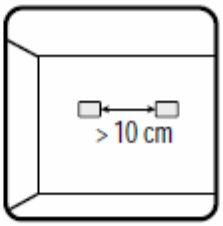

Minimum distance between two separate transmitters on the same wall.

Fitting location of the device should be chosen with care. All error factors which affects to the measurement, must be prevented well as possible. For example:

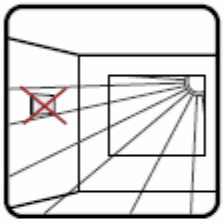

Do not fit in a location where the sun can shine directly.

Do not fit in a location where people's continued presence affects the measurement.

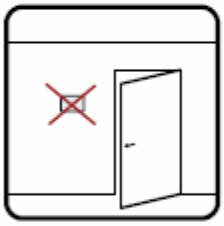

Do not fit near doors and windows.

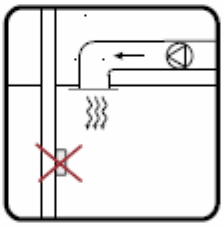

Do not fit in a location where air duct can affect the measurement.

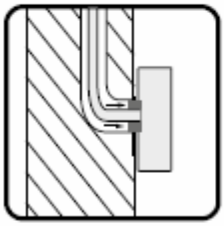

Prevent air flow from the flush mounting box.

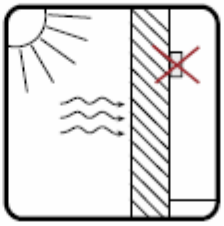

Do not install on outer wall.

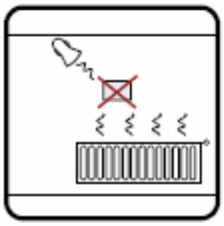

Do not fit in location where heating coil or direct lighting affects the measurement

Controller Commissioning

- Open the controller by pressing the upper clip.
- Connect 24VAC /24VDC to the terminals G and G0. If 24VDC is used only the 0 – 10V outputs are controlled.
- Connect the Modbus terminals A+, B- and C to the terminals of the RCO controller (COM3 or COM4).
- Connect the inputs and outputs.

Terminal Connections

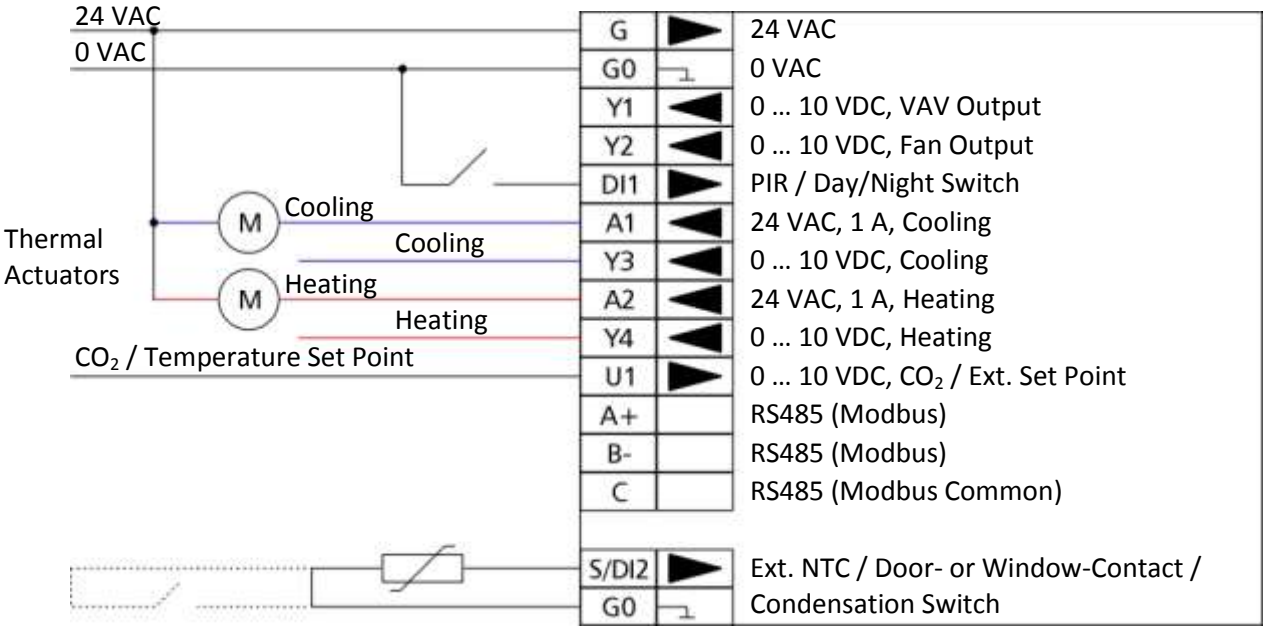

Interface Parameter Settings

- Close jumper C (configuration mode)
- Set parameters (19.2 kBit/s, even parity) using the keys <Occupied> and <Fan Control>. Maximum number of Room Control Units on the bus: 32.
- Select menu with , accept value with .
- Set values with **-** and **+** buttons.
- Open jumper C (user mode).
- Close housing.

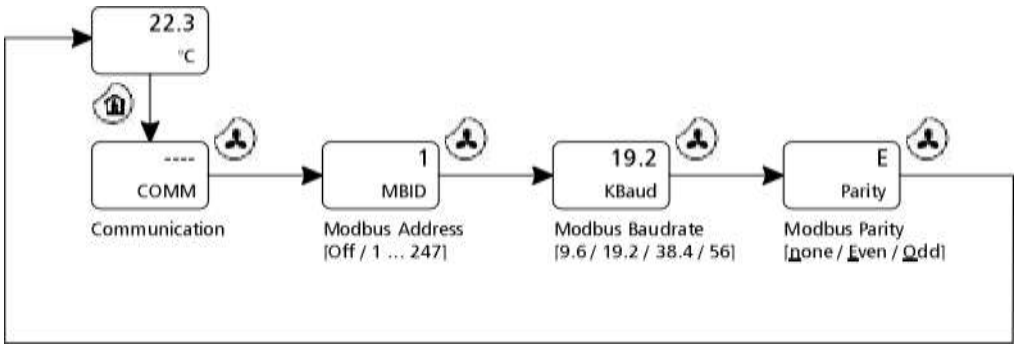

Manual Settings Of The Controller Parameter

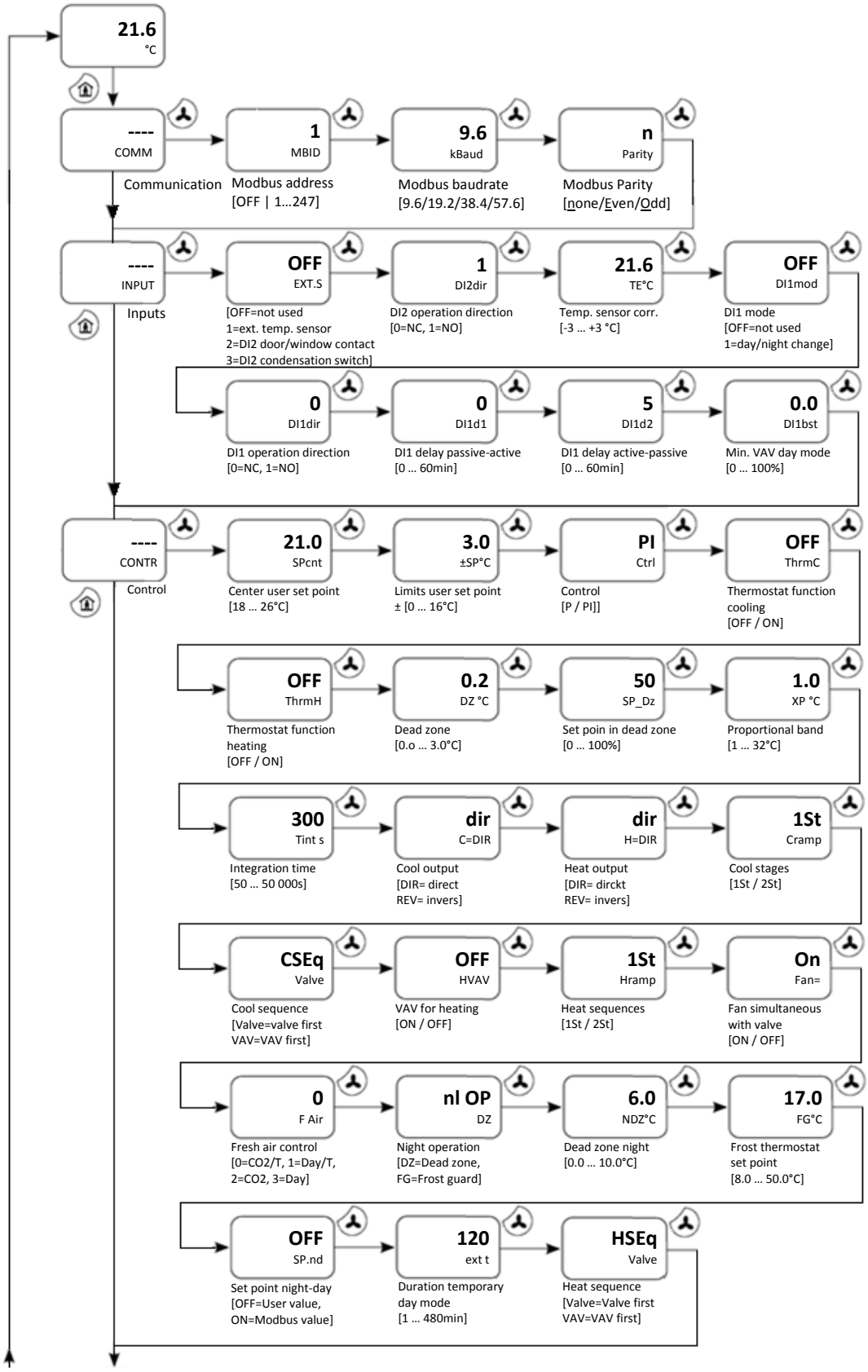

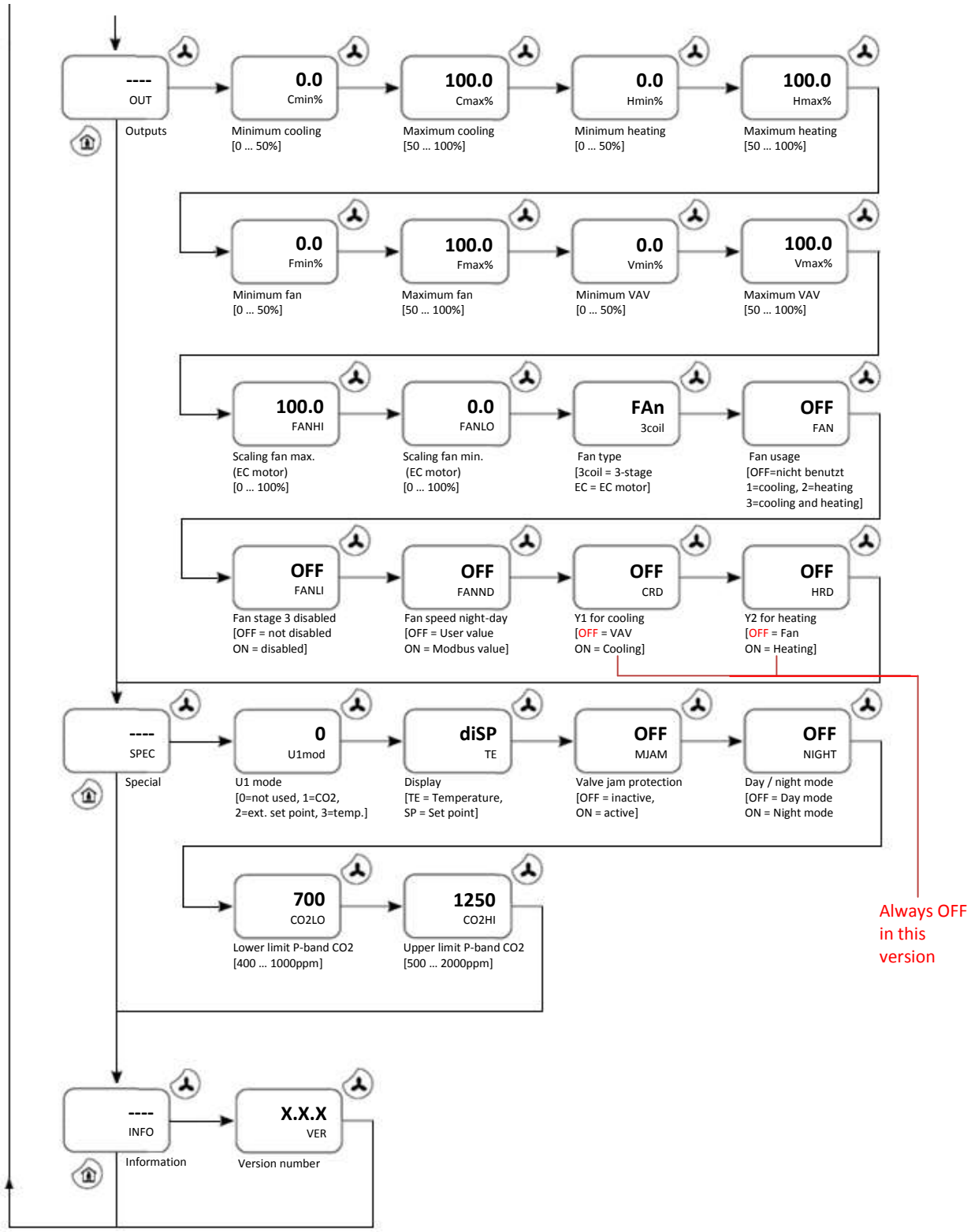
---- OUT
Outputs
0.0 Cmin%
Minimum cooling [0 ... 50%]
100.0 Cmax%
Maximum cooling [50 ... 100%]
0.0 Hmin%
Minimum heating [0 ... 50%]
100.0 Hmax%
Maximum heating [50 ... 100%]
0.0 Fmin%
Minimum fan [0 ... 50%]
100.0 Fmax%
Maximum fan [50 ... 100%]
0.0 Vmin%
Minimum VAV [0 ... 50%]
100.0 Vmax%
Maximum VAV [50 ... 100%]
100.0 FANHI
Scaling fan max. (EC motor) [0 ... 100%]
0.0 FANLO
Scaling fan min. (EC motor) [0 ... 100%]
FAn 3coil
Fan type [3coil = 3-stage EC = EC motor]
OFF FAN
Fan usage [OFF=nicht benutzt 1=cooling, 2=heating 3=cooling and heating]
OFF FANLI
Fan stage 3 disabled [OFF = not disabled ON = disabled]
OFF FANND
Fan speed night-day [OFF = User value ON = Modbus value]
OFF CRD
Y1 for cooling [OFF = VAV ON = Cooling]
OFF HRD
Y2 for heating [OFF = Fan ON = Heating]
---- SPEC
Special
0 U1mod
U1 mode [0=not used, 1=CO2, 2=ext. set point, 3=temp.]
diSP TE
Display [TE = Temperature, SP = Set point]
OFF MJAM
Valve jam protection [OFF = inactive, ON = active]
OFF NIGHT
Day / night mode [OFF = Day mode ON = Night mode
700 CO2LO
Lower limit P-band CO2 [400 ... 1000ppm]
1250 CO2HI
Upper limit P-band CO2 [500 ... 2000ppm]
Always OFF in this version
---- INFO
Information
X.X.X VER
Version number

The Room Control Unit uses the **Modbus RTU** protocol. Following function codes are supported:

0x01	Read Coils
0x02	Read Discrete Inputs
0x03	Read Holding Registers
0x04	Read Input Registers
0x05	Write Single Coil
0x06	Write Single Register
0x0F	Write Multiple Coils
0x10	Write Multiple Registers

Controller Functions

The Room Control Unit can be used in a 4-pipe system. For 2-pipe system (with changeover) the ER 450 has to be used.

Commissioning

Modbus RTU 1st Version

Protocol selection in RCO-tool: **Modbus**.
The addressing of the registers in the application layer (RCO-tool) is equivalent to the physical addresses. Address range: 0 … 65535.

ERR 440:0:COM3 (Modbus)

Name:		Handshake:	None
Port:	COM3	Echo:	☐
Baudrate:	19200	Prompt:	☑
Data Bits:	8	Protocol:	☐
Parity:	Even	Multiserial:	☐
Stop Bits:	1		

Name	Slave Address	Point Address	Registers Count	Read Function	Write Function	Modbus Type	Info
E_Overd_PWM_Cool	1	0	1	Read Coil Status	Write Single Coil	UINT16	OFF / ON
E_Overd_0_10_Cool	1	1	1	Read Coil Status	Write Single Coil	UINT16	OFF / ON
E_Overd_PWM_Heat	1	2	1	Read Coil Status	Write Single Coil	UINT16	OFF / ON
E_Overd_0_10_Heat	1	3	1	Read Coil Status	Write Single Coil	UINT16	OFF / ON
E_Overd_VAV	1	4	1	Read Coil Status	Write Single Coil	UINT16	OFF / ON
E_Overd_Fan	1	5	1	Read Coil Status	Write Single Coil	UINT16	OFF / ON
Service_Alarm_Reset	1	10	1	Read Coil Status	Write Single Coil	UINT16	OFF / ON
Cooling_Disabled	1	11	1	Read Coil Status	Write Single Coil	UINT16	OFF / ON
Heating_Disabled	1	12	1	Read Coil Status	Write Single Coil	UINT16	OFF / ON
Night_Mode	1	13	1	Read Coil Status	Write Single Coil	UINT16	OFF / ON
Cooling_Output	1	14	1	Read Coil Status	Write Single Coil	UINT16	0: direct / 1: inverted
Heating_Output	1	15	1	Read Coil Status	Write Single Coil	UINT16	0: direct / 1: inverted
Cooling_Sequences	1	16	1	Read Coil Status	Write Single Coil	UINT16	0: 1 sequence / 1: 2 sequences
Cooling_Sequence	1	17	1	Read Coil Status	Write Single Coil	UINT16	0: valve first / 1: VAV first
Fan_simultan_Valve	1	18	1	Read Coil Status	Write Single Coil	UINT16	OFF / ON
Oper_Mode_Night	1	19	1	Read Coil Status	Write Single Coil	UINT16	0: dead zone / 1: fcst
Eff_SP_Night_Day	1	20	1	Read Coil Status	Write Single Coil	UINT16	0: user value / 1: Modbus value
Valve_Jan_Prev	1	21	1	Read Coil Status	Write Single Coil	UINT16	OFF /ON
Fan_Type	1	22	1	Read Coil Status	Write Single Coil	UINT16	0: 3 stages / 1: EC motor
Disable_Fan_St3	1	23	1	Read Coil Status	Write Single Coil	UINT16	OFF /ON
Fan_Stage_Night_Day	1	24	1	Read Coil Status	Write Single Coil	UINT16	0: user value / 1: Modbus value
VAV_Heating	1	25	1	Read Coil Status	Write Single Coil	UINT16	OFF /ON
Show_on_Display	1	26	1	Read Coil Status	Write Single Coil	UINT16	0: temperature / 1: set point
DI2_Oper_Direction	1	27	1	Read Coil Status	Write Single Coil	UINT16	0: NC / 1: ND
Thermost_Fct_Cool	1	28	1	Read Coil Status	Write Single Coil	UINT16	0: P/PI / 1: thermostat
Thermost_Fct_Heat	1	29	1	Read Coil Status	Write Single Coil	UINT16	0: P/PI / 1: thermostat
Y1_Cooling	1	30	1	Read Coil Status	Write Single Coil	UINT16	0: VAV
Y1_Heating	1	31	1	Read Coil Status	Write Single Coil	UINT16	0: fan
Heating_Sequences	1	32	1	Read Coil Status	Write Single Coil	UINT16	0: 1 sequence / 1: 2 sequences
Occupied_by_PIR	1	0	1	Read Input Status	Off	UINT16	OFF /ON
Occupied_by_Button	1	1	1	Read Input Status	Off	UINT16	OFF /ON
Day_Extension	1	2	1	Read Input Status	Off	UINT16	OFF /ON
DI1_Status	1	3	1	Read Input Status	Off	UINT16	OFF /ON
DI2_Status	1	4	1	Read Input Status	Off	UINT16	OFF /ON
CO2_Overdrive	1	5	1	Read Input Status	Off	UINT16	OFF /ON
Temperature	1	3	1	Read Input Register	Off	SINT16	-600 ... 600 (-60.0 ... 60.0 °C)
Ext_Temp_Sensor	1	4	1	Read Input Register	Off	SINT16	-600 ... 600 (-60.0 ... 60.0 °C)
CO2	1	5	1	Read Input Register	Off	SINT16	0 ... 2000 ppm
Eff_Set_Point	1	6	1	Read Input Register	Off	SINT16	50 ... 500 (5.0 ... 50.0 °C)
Cooling_currently	1	7	1	Read Input Register	Off	SINT16	0 ... 1000 (0.0 ... 100.0 %)
Heating_currently	1	8	1	Read Input Register	Off	SINT16	0 ... 1000 (0.0 ... 100.0 %)
Fan_Stage_currently	1	9	1	Read Input Register	Off	SINT16	0 ... 4 (OFF, 1, 2, 3, Automatic)
Fan_Speed_Y2	1	10	1	Read Input Register	Off	SINT16	0 ... 1000 (0.0 ... 100.0 %)
VAV_Y1	1	11	1	Read Input Register	Off	SINT16	0 ... 1000 (0.0 ... 100.0 %)
Cooling_Y3	1	12	1	Read Input Register	Off	SINT16	0 ... 1000 (0.0 ... 100.0 %)
Heating_Y4	1	13	1	Read Input Register	Off	SINT16	0 ... 1000 (0.0 ... 100.0 %)
U1_Value	1	14	1	Read Input Register	Off	SINT16	0 ... 1000 (0.0 ... 10.0 V)
Ext_Temp_Value	1	15	1	Read Input Register	Off	SINT16	-600 ... 600 (-60.0 ... 60.0 °C)
VAV_Control	1	16	1	Read Input Register	Off	SINT16	0: CO2 / 1: Temp / 2: PIR
Set_Point_User	1	17	1	Read Input Register	Off	SINT16	x ... y (x/10 ... y/10)

ERR 440:0:COM3 (Modbus)

Name:		Handshake:	None
Port:	COM3	Echo:	☐
Baudrate:	19200	Prompt:	☑
Data Bits:	8	Protocol:	☐
Parity:	Even	Multisend:	☐
Stop Bits:	1		

Name	Slave Address	Point Address	Registers Count	Read Function	Write Function	Modbus Type	Info
Fan_Stage_User	1	18	1	Read Input Register	Off	SINT16	0 ... 4 (OFF, 1, 2, 3, Automatic)
Set_Point_Dev_User	1	19	1	Read Input Register	Off	SINT16	x ... y (x/10 ... y/10)
Cooling_A1	1	20	1	Read Input Register	Off	SINT16	0 ... 1000 (0.0 ... 100.0 %)
Heating_A2	1	21	1	Read Input Register	Off	SINT16	0 ... 1000 (0.0 ... 100.0 %)
Fan_Speed_Modbus	1	0	1	Read Multiple Register	Write Multiple Register	SINT16	0 ... 4 (OFF, 1, 2, 3, Automatic)
Set_Point_Modbus	1	1	1	Read Multiple Register	Write Multiple Register	SINT16	80 ... 500 (8.0 ... 50.0 °C)
Over_Cool_PWM_Modb	1	2	1	Read Multiple Register	Write Multiple Register	SINT16	0 ... 1000 (0.0 ... 100.0 %)
Over_Cool_0_10_Modb	1	3	1	Read Multiple Register	Write Multiple Register	SINT16	0 ... 1000 (0.0 ... 100.0 %)
Over_Heat_PWM_Modb	1	4	1	Read Multiple Register	Write Multiple Register	SINT16	0 ... 1000 (0.0 ... 100.0 %)
Over_Heat_0_10_Modb	1	5	1	Read Multiple Register	Write Multiple Register	SINT16	0 ... 1000 (0.0 ... 100.0 %)
Over_VAV_Modb	1	6	1	Read Multiple Register	Write Multiple Register	SINT16	0 ... 1000 (0.0 ... 100.0 %)
Over_Fan_Modb	1	7	1	Read Multiple Register	Write Multiple Register	SINT16	0 ... 1000 (0.0 ... 100.0 %)
Ext_Sensor_DI2	1	8	1	Read Multiple Register	Write Multiple Register	SINT16	0: not used / 1: ext. tmp / 2: door/window / 3: cond. switch
Tmp_Sensor_Corr	1	9	1	Read Multiple Register	Write Multiple Register	SINT16	-30 ... 30 (-3.0 ... 3.0 K)
Center_Set_Pt_User	1	10	1	Read Multiple Register	Write Multiple Register	SINT16	180 ... 260 (18.0 ... 26.0 °C)
Limits_Set_Pt_User	1	11	1	Read Multiple Register	Write Multiple Register	SINT16	0 ... 160 (0.0 ... 16.0 K)
Control	1	12	1	Read Multiple Register	Write Multiple Register	SINT16	0: P / 1: PI
Dead_Zone	1	13	1	Read Multiple Register	Write Multiple Register	SINT16	0 ... 30 (0.0 ... 3.0 °C)
Set_Pt_in_Dead_Zone	1	14	1	Read Multiple Register	Write Multiple Register	SINT16	0 ... 100 %
Prop_Band	1	15	1	Read Multiple Register	Write Multiple Register	SINT16	10 ... 320 (1.0 ... 32.0 °C)
Integral_Time	1	16	1	Read Multiple Register	Write Multiple Register	SINT16	50 ... 5000 sec
Fresh_Air_Control	1	17	1	Read Multiple Register	Write Multiple Register	SINT16	0: CO2/T / 1: Day/T / 2: CO2 / 3: Day
Dead_Zone_Night	1	18	1	Read Multiple Register	Write Multiple Register	SINT16	0 ... 100 (0.0 ... 10.0 °C)
Frost_Therm_SP	1	19	1	Read Multiple Register	Write Multiple Register	SINT16	80 ... 500 (8.0 ... 50.0 °C)
DI1_Mode	1	20	1	Read Multiple Register	Write Multiple Register	SINT16	0: not used / 1: day/night change
DI1_Oper_Direct	1	21	1	Read Multiple Register	Write Multiple Register	SINT16	0: NC / 1: NO
DI1_Delay_p_a	1	22	1	Read Multiple Register	Write Multiple Register	SINT16	0 ... 60 min
DI1_Delay_a_p	1	23	1	Read Multiple Register	Write Multiple Register	SINT16	0 ... 60 min
Temporary_Day_Mode	1	24	1	Read Multiple Register	Write Multiple Register	SINT16	1 ... 480 min
Min_VAV_Day	1	25	1	Read Multiple Register	Write Multiple Register	SINT16	0 ... 1000 (0.0 ... 100.0 %)
U1_Mode	1	26	1	Read Multiple Register	Write Multiple Register	SINT16	0: not used / 1: CO2 / 2: set point / 3: temperature
Min_Cooling	1	27	1	Read Multiple Register	Write Multiple Register	SINT16	0 ... 500 (0.0 ... 50.0 %)
Max_Cooling	1	28	1	Read Multiple Register	Write Multiple Register	SINT16	500 ... 1000 (50.0 ... 100.0 %)
Min_Heating	1	29	1	Read Multiple Register	Write Multiple Register	SINT16	0 ... 500 (0.0 ... 50.0 %)
Max_Heating	1	30	1	Read Multiple Register	Write Multiple Register	SINT16	500 ... 1000 (50.0 ... 100.0 %)
Min_Fan	1	31	1	Read Multiple Register	Write Multiple Register	SINT16	0 ... 500 (0.0 ... 50.0 %)
Max_Fan	1	32	1	Read Multiple Register	Write Multiple Register	SINT16	500 ... 1000 (50.0 ... 100.0 %)
Min_VAV	1	33	1	Read Multiple Register	Write Multiple Register	SINT16	0 ... 500 (0.0 ... 50.0 %)
Max_VAV	1	34	1	Read Multiple Register	Write Multiple Register	SINT16	500 ... 1000 (50.0 ... 100.0 %)
Scaling_Fan_Max	1	35	1	Read Multiple Register	Write Multiple Register	SINT16	0 ... 1000 (0.0 ... 100.0 %)
Scaling_Fan_Min	1	36	1	Read Multiple Register	Write Multiple Register	SINT16	0 ... 1000 (0.0 ... 100.0 %)
Fan_Usage	1	37	1	Read Multiple Register	Write Multiple Register	SINT16	0: not used / 1: cooling / 2: heating / 3: heating & cooling
LL_P_Band_CO2	1	38	1	Read Multiple Register	Write Multiple Register	SINT16	400 ... 1000 ppm
UL_P_Band_CO2	1	39	1	Read Multiple Register	Write Multiple Register	SINT16	500 ... 2000 ppm

Protocol selection in RCO-tool (available from version 2.2.0): **ModbusRTU** (available from firmware version 2.0.0).

The addressing of the registers in the application layer (RCO-tool) starts with address 1 (physical address + 1). Address range: 1 … 65536.

Discrete Inputs

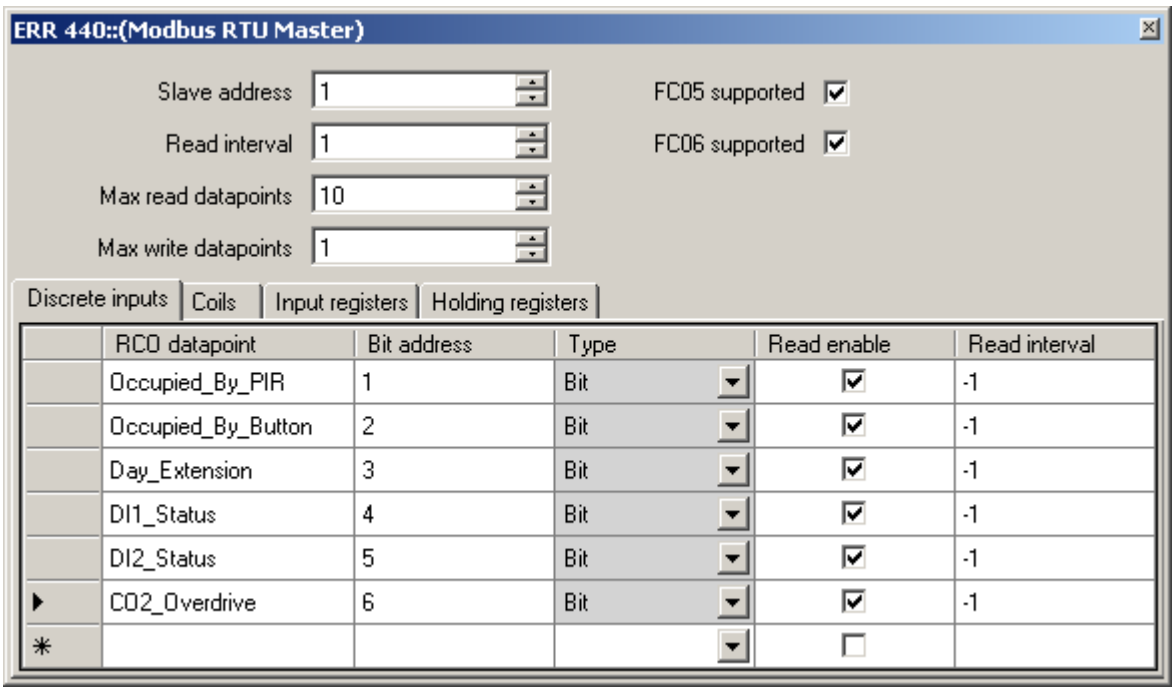

RCO datapoint	Bit address	Type	Read enable	Read interval
Occupied_By_PIR	1	Bit	☑	-1
Occupied_By_Button	2	Bit	☑	-1
Day_Extension	3	Bit	☑	-1
DI1_Status	4	Bit	☑	-1
DI2_Status	5	Bit	☑	-1
CO2_Overdrive	6	Bit	☑	-1
			☐	

Coils

ERR 440::(Modbus RTU Master)

Slave address: 1
Read interval: 1
Max read datapoints: 10
Max write datapoints: 1
FC05 supported ☑
FC06 supported ☑

Discrete inputs | Coils | Input registers | Holding registers

	RCO datapoint	Bit address	Type	Read enable	Read interval	Write enable	Write interval
	Enable_Overdrive_PWM_Cooling	1	Bit	☑	-1	☑	0
	Enable_Overdrive_0_10V_Cooling	2	Bit	☑	-1	☑	0
	Enable_Overdrive_PWM_Heating	3	Bit	☑	-1	☑	0
	Enable_Overdrive_0_10V_Heating	4	Bit	☑	-1	☑	0
	Enable_Overdrive_VAV	5	Bit	☑	-1	☑	0
	Enable_Overdrive_Fan	6	Bit	☑	-1	☑	0
	Service_Alarm_Reset	11	Bit	☑	-1	☑	0
	Cooling_Disabled	12	Bit	☑	-1	☑	0
	Heating_Disabled	13	Bit	☑	-1	☑	0
	Night_Mode	14	Bit	☑	-1	☑	0
	Cooling_Output	15	Bit	☑	-1	☑	0
	Heating_Output	16	Bit	☑	-1	☑	0
	Cooling_Sequences	17	Bit	☑	-1	☑	0
	Cooling_Sequence	18	Bit	☑	-1	☑	0
	Fan_Simultan_With_Valve	19	Bit	☑	-1	☑	0
	Operation_Mode_Night	20	Bit	☑	-1	☑	0
	Effective_Set_Point_Night_To_Day	21	Bit	☑	-1	☑	0
	Valve_Jam_Prevention	22	Bit	☑	-1	☑	0
	Fan_Type	23	Bit	☑	-1	☑	0
	Disable_Fan_Stage_3	24	Bit	☑	-1	☑	0
	Effective_Fan_Stage_Night_To_Day	25	Bit	☑	-1	☑	0
	VAV_Heating	26	Bit	☑	-1	☑	0
	Show_On_Display	27	Bit	☑	-1	☑	0
	DI2_Operation_Direction	28	Bit	☑	-1	☑	0
	Thermostat_Function_Cooling	29	Bit	☑	-1	☑	0
	Thermostat_Function_Heating	30	Bit	☑	-1	☑	0
	Y1_Cooling	31	Bit	☑	-1	☑	0
	Y2_Heating	32	Bit	☑	-1	☑	0
	Heating_Sequences	33	Bit	☑	-1	☑	0

Input Register

ERR 440::(Modbus RTU Master)

Slave address: 1
Read interval: 1
Max read datapoints: 10
Max write datapoints: 1
FC05 supported: ☑
FC06 supported: ☑

Discrete inputs | Coils | Input registers | Holding registers

	RCO datapoint	Start register	Type	Little endian byte ordering	Little endian word ordering	Read enable	Read interval
	Temperature	4	Sint-16	☐	☐	☑	-1
	External_Temperature_Sensor	5	Sint-16	☐	☐	☑	-1
	CO2	6	Sint-16	☐	☐	☑	-1
	Effective_Set_Point	7	Sint-16	☐	☐	☑	-1
	Cooling_Currently	8	Sint-16	☐	☐	☑	-1
	Heating_Currently	9	Sint-16	☐	☐	☑	-1
	Fan_Stage_Currently	10	Sint-16	☐	☐	☑	-1
	Fan_Speed_Y2	11	Sint-16	☐	☐	☑	-1
	VAV_Y1	12	Sint-16	☐	☐	☑	-1
	Cooling_Y3	13	Sint-16	☐	☐	☑	-1
	Heating_Y4	14	Sint-16	☐	☐	☑	-1
	U1_Value	15	Sint-16	☐	☐	☑	-1
	External_Temperature_Value	16	Sint-16	☐	☐	☑	-1
	VAV_Control	17	Sint-16	☐	☐	☑	-1
	Set_Point_User	18	Sint-16	☐	☐	☑	-1
	Fan_Stage_User	19	Sint-16	☐	☐	☑	-1
	Set_Point_Deviation_User	20	Sint-16	☐	☐	☑	-1
	Cooling_A1	21	Sint-16	☐	☐	☑	-1
▶	Heating_A2	22	Sint-16	☐	☐	☑	-1
*				☐	☐	☐	

Holding Register

ERR 440::(Modbus RTU Master)

Slave address: 1
Read interval: 1
Max read datapoints: 10
Max write datapoints: 1
FC05 supported ☑
FC06 supported ☑

Discrete inputs | Coils | Input registers | Holding registers

RCO datapoint	Start register	Type	Little endian byte ordering	Little endian word ordering	Read enable	Read interval	Write enable	Write interval
Fan_Stage_Modbus	1	Sint-16	☐	☐	☑	-1	☑	0
Set_Point_Modbus	2	Sint-16	☐	☐	☑	-1	☑	0
Override_Cooling_PWM_Modbus_A1	3	Sint-16	☐	☐	☑	-1	☑	0
Override_Cooling_0_10V_Modbus_Y3	4	Sint-16	☐	☐	☑	-1	☑	0
Override_Heating_PWM_Modbus_A2	5	Sint-16	☐	☐	☑	-1	☑	0
Override_Heating_0_10V_Modbus_Y4	6	Sint-16	☐	☐	☑	-1	☑	0
Override_VAV_Modbus_Y1	7	Sint-16	☐	☐	☑	-1	☑	0
Override_Fan_Modbus_Y2	8	Sint-16	☐	☐	☑	-1	☑	0
External_Sensor_DI2	9	Sint-16	☐	☐	☑	-1	☑	0
Temperature_Sensor_Correction	10	Sint-16	☐	☐	☑	-1	☑	0
Center_Set_Point_User	11	Sint-16	☐	☐	☑	-1	☑	0
Limits_Set_Point_User	12	Sint-16	☐	☐	☑	-1	☑	0
Control	13	Sint-16	☐	☐	☑	-1	☑	0
Dead_Zone	14	Sint-16	☐	☐	☑	-1	☑	0
Set_Point_In_Dead_Zone	15	Sint-16	☐	☐	☑	-1	☑	0
Proportional_Band	16	Sint-16	☐	☐	☑	-1	☑	0
Integral_Time	17	Sint-16	☐	☐	☑	-1	☑	0
Fresh_Air_Control	18	Sint-16	☐	☐	☑	-1	☑	0
Dead_Zone_Night	19	Sint-16	☐	☐	☑	-1	☑	0
Frost_Thermostat_Set_Point	20	Sint-16	☐	☐	☑	-1	☑	0
DI1_Mode	21	Sint-16	☐	☐	☑	-1	☑	0
DI1_Operation_Direction	22	Sint-16	☐	☐	☑	-1	☑	0
DI1_Delay_Passive_To_Active	23	Sint-16	☐	☐	☑	-1	☑	0
DI1_Delay_Active_To_Passive	24	Sint-16	☐	☐	☑	-1	☑	0
Duration_Temporary_Day_Mode	25	Sint-16	☐	☐	☑	-1	☑	0
Min_VAV_Day	26	Sint-16	☐	☐	☑	-1	☑	0
U1_Mode	27	Sint-16	☐	☐	☑	-1	☑	0
Min_Cooling	28	Sint-16	☐	☐	☑	-1	☑	0
Max_Cooling	29	Sint-16	☐	☐	☑	-1	☑	0
Min_Heating	30	Sint-16	☐	☐	☑	-1	☑	0
Max_Heating	31	Sint-16	☐	☐	☑	-1	☑	0
Min_Fan	32	Sint-16	☐	☐	☑	-1	☑	0
Max_Fan	33	Sint-16	☐	☐	☑	-1	☑	0
Min_VAV	34	Sint-16	☐	☐	☑	-1	☑	0
Max_VAV	35	Sint-16	☐	☐	☑	-1	☑	0
Scaling_Factor_Fan_Max	36	Sint-16	☐	☐	☑	-1	☑	0
Scaling_Factor_Fan_Min	37	Sint-16	☐	☐	☑	-1	☑	0
Fan_Usage	38	Sint-16	☐	☐	☑	-1	☑	0
Lower_Limit_P_Band_CO2	39	Sint-16	☐	☐	☑	-1	☑	0
Upper_Limit_P_Band_CO2	40	Sint-16	☐	☐	☑	-1	☑	0

Control Methods

Heating & 1-stage cooling

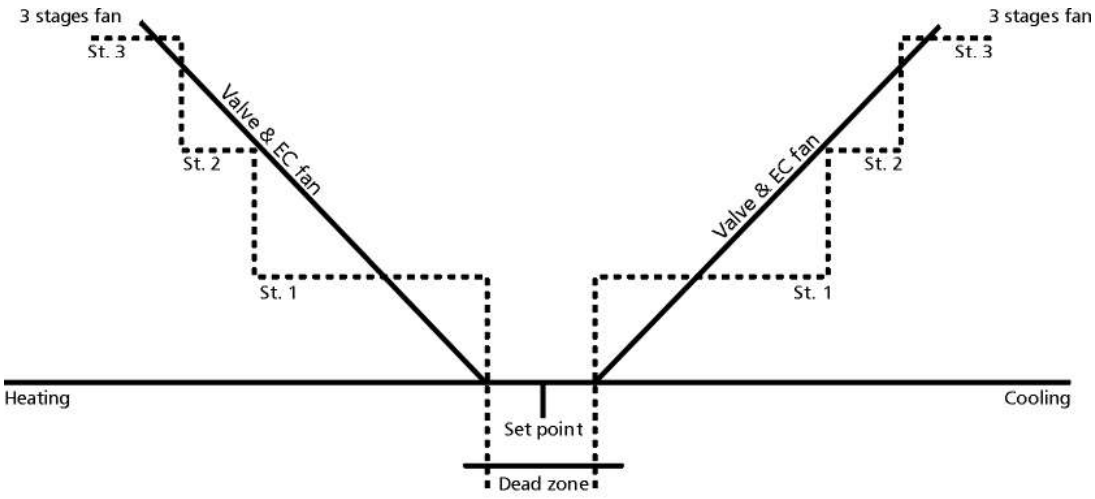

Parameters	Modbus Address (Modbus RTU)	Setting
Cooling disabled	11 (12) Coil	0 (cooling enabled)
Heating disabled	12 (13) Coil	0 (heating enabled)
Night mode	13 (14) Coil	0 (off) / 1 (on)
Cooling output	14 (15) Coil	0 (direct) / 1 (inverted)
Heating output	15 (16) Coil	0 (direct) / 1 (inverted)
Cooling sequences	16 (17) Coil	0 (1 sequence)
Cooling sequence	17 (18) Coil	0 (valve first) / 1 (VAV first)
Operation mode night	19 (20) Coil	0 (reduced (dead zone)) 1 (frost protection)
Valve jam prevention	21 (22) Coil	0 (off) / 1 (on)
Fan stage 3	23 (24) Coil	0 (enabled) / 1 (disabled)
Display	26 (27) Coil	0 (temperature) / 1 (set point)
Thermostat function cooling	28 (29) Coil	0 (controlled) / 1 (2 point)
Thermostat function heating	29 (30) Coil	0 (controlled) / 1 (2 point)
Cooling on Y1 (standard: Y3)	30 (31) Coil	0 (VAV) / 1 (cooling)
Heating on Y2 (standard: Y4)	31 (32) Coil	0 (fan) / 1 (heating)
Heating sequences	32 (33) Coil	0 (1 sequence)
Occupied by PIR	0 (1) Discrete Input	0 (off) / 1 (occupied by sensor)
Occupied by button	1 (2) Discrete Input	0 (off) / 1 (occupied by button)
Day extension	2 (3) Discrete Input	0 (off) / 1 (active)
External sensor / DI2	8 (9) Holding Register	0 (not used) 1 (external temp. sensor) 2 (window contact) 3 (condensation switch)
Temperature sensor correction	9 (10) Holding Register	-30 (-3.0 K) … 30 (3.0 K)
Center set point user	10 (11) Holding Register	180 (18.0 °C) … 260 (26.0 °C)
Limits set point user	11 (12) Holding Register	0 (0.0 K) … 160 (16.0 K)

Parameters	Modbus Address (Modbus RTU)	Setting
Control	12 (13) Holding Register	0 (P) / 1 (PI)
Dead zone	13 (14) Holding Register	0 (0.0 K) … 30 (3.0 K)
Set point in dead zone	14 (15) Holding Register	0 … 100 % (50 %: center)
P-band	15 (16) Holding Register	10 (1.0 K) … 320 (32.0 K)
Integral time	16 (17) Holding Register	50 … 5000 s
Dead zone night (reduction)	18 (19) Holding Register	0 (0.0 K) … 100 (10.0 K)
Frost set point	19 (20) Holding Register	80 (8.0 °C) … 500 (50.0 °C)
DI1 function	20 (21) Holding Register	0 (off) / 1 (day/night)
DI1 operation direction	21 (22) Holding Register	0 (NC) / 1 (NO)
DI1 delay passive > active	22 (23) Holding Register	0 … 60 min
DI1 delay active > passive	23 (24) Holding Register	0 … 60 min
Duration temporary day mode	24 (25) Holding Register	1 … 480 min
Fan usage	37 (38) Holding Register	3 (cooling and heating)

Heating & 2-stages cooling

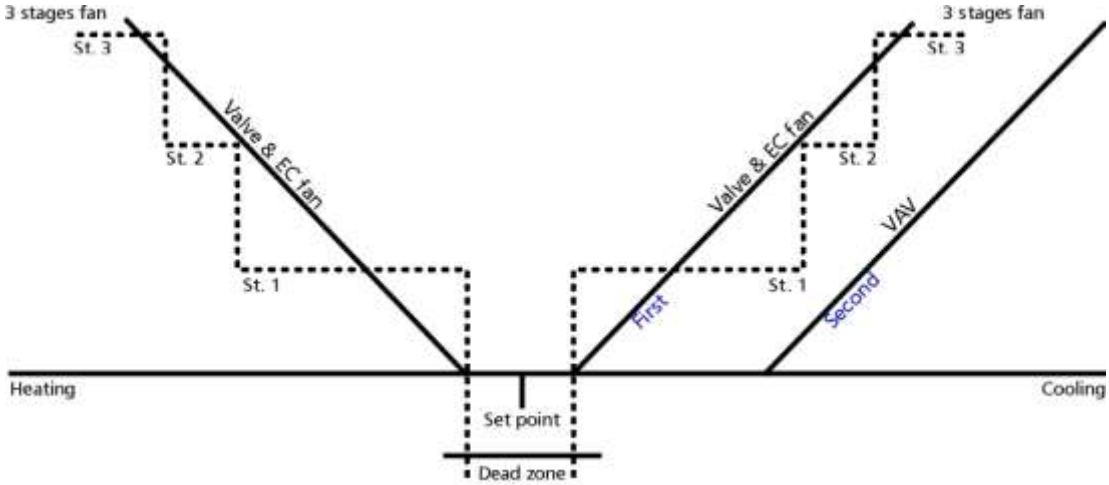

Parameters	Modbus Address (Modbus RTU)	Setting
Cooling disabled	11 (12) Coil	0 (cooling enabled)
Heating disabled	12 (13) Coil	0 (heating enabled)
Night mode	13 (14) Coil	0 (off) / 1 (on)
Cooling output	14 (15) Coil	0 (direct) / 1 (inverted)
Heating output	15 (16) Coil	0 (direct) / 1 (inverted)
Cooling sequences	16 (17) Coil	1 (2 sequences)
Cooling sequence	17 (18) Coil	0 (valve first) / 1 (VAV first)
Operation mode night	19 (20) Coil	0 (reduced (dead zone)) 1 (frost protection)
Valve jam prevention	21 (22) Coil	0 (off) / 1 (on)
Fan stage 3	23 (24) Coil	0 (enabled) / 1 (disabled)
Display	26 (27) Coil	0 (temperature) / 1 (set point)
Thermostat function cooling	28 (29) Coil	0 (controlled) / 1 (2 point)
Thermostat function heating	29 (30) Coil	0 (controlled) / 1 (2 point)
Cooling on Y1 (standard: Y3)	30 (31) Coil	0 (VAV) / 1 (cooling)
Heating on Y2 (standard: Y4)	31 (32) Coil	0 (fan) / 1 (heating)
Heating sequences	32 (33) Coil	0 (1 sequence)
Occupied by PIR	0 (1) Discrete Input	0 (off) / 1 (occupied by sensor)
Occupied by button	1 (2) Discrete Input	0 (off) / 1 (occupied by button)
Day extension	2 (3) Discrete Input	0 (off) / 1 (active)
External sensor / DI2	8 (9) Holding Register	0 (not used) 1 (external temp. sensor) 2 (window contact) 3 (condensation switch)
Temperature sensor correction	9 (10) Holding Register	-30 (-3.0 K) … 30 (3.0 K)
Center set point user	10 (11) Holding Register	180 (18.0 °C) … 260 (26.0 °C)
Limits set point user	11 (12) Holding Register	0 (0.0 K) … 160 (16.0 K)

Parameters	Modbus Address (Modbus RTU)	Setting
Control	12 (13) Holding Register	0 (P) / 1 (PI)
Dead zone	13 (14) Holding Register	0 (0.0 K) … 30 (3.0 K)
Set point in dead zone	14 (15) Holding Register	0 … 100 % (50 %: center)
P-band	15 (16) Holding Register	10 (1.0 K) … 320 (32.0 K)
Integral time	16 (17) Holding Register	50 … 5000 s
Dead zone night (reduction)	18 (19) Holding Register	0 (0.0 K) … 100 (10.0 K)
Frost set point	19 (20) Holding Register	80 (8.0 °C) … 500 (50.0 °C)
DI1 function	20 (21) Holding Register	0 (off) / 1 (day/night)
DI1 operation direction	21 (22) Holding Register	0 (NC) / 1 (NO)
DI1 delay passive > active	22 (23) Holding Register	0 … 60 min
DI1 delay active > passive	23 (24) Holding Register	0 … 60 min
Duration temporary day mode	24 (25) Holding Register	1 … 480 min
Fan usage	37 (38) Holding Register	3 (cooling and heating)

1-stage heating & 1-stage cooling, valve opens before the fan speed increases

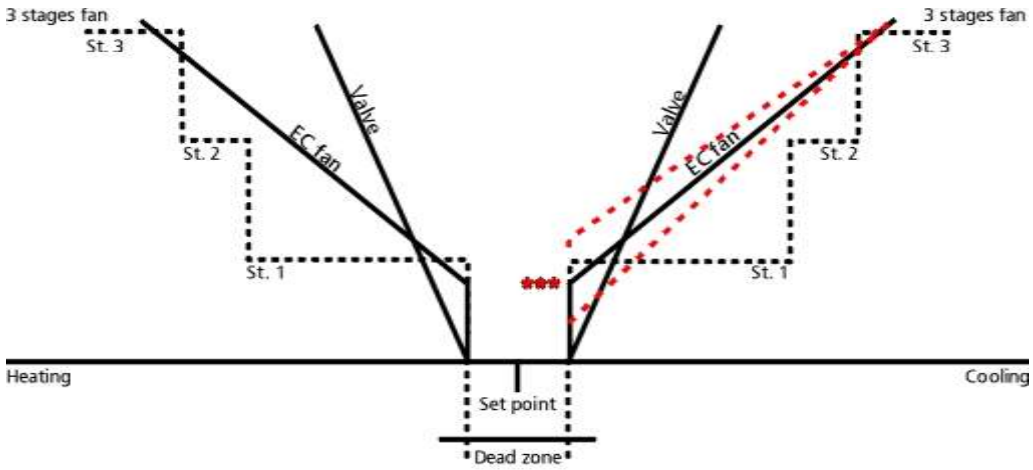

Parameters	Modbus Address (Modbus RTU)	Setting
Cooling disabled	11 (12) Coil	0 (cooling enabled)
Heating disabled	12 (13) Coil	0 (heating enabled)
Night mode	13 (14) Coil	0 (off) / 1 (on)
Cooling output	14 (15) Coil	0 (direct) / 1 (inverted)
Heating output	15 (16) Coil	0 (direct) / 1 (inverted)
Cooling sequences	16 (17) Coil	0 (1 sequence)
Cooling sequence	17 (18) Coil	0 (valve first) / 1 (VAV first)
Fan simultaneously with valve	18 (19) Coil	0 (off)
Operation mode night	19 (20) Coil	0 (reduced (dead zone)) 1 (frost protection)
Valve jam prevention	21 (22) Coil	0 (off) / 1 (on)
Fan stage 3	23 (24) Coil	0 (enabled) / 1 (disabled)
Display	26 (27) Coil	0 (temperature) / 1 (set point)
Thermostat function cooling	28 (29) Coil	0 (controlled) / 1 (2 point)
Thermostat function heating	29 (30) Coil	0 (controlled) / 1 (2 point)
Cooling on Y1 (standard: Y3)	30 (31) Coil	0 (VAV) / 1 (cooling)
Heating on Y2 (standard: Y4)	31 (32) Coil	0 (fan) / 1 (heating)
Heating sequences	32 (33) Coil	0 (1 sequence)
Occupied by PIR	0 (1) Discrete Input	0 (off) / 1 (occupied by sensor)
Occupied by button	1 (2) Discrete Input	0 (off) / 1 (occupied by button)
Day extension	2 (3) Discrete Input	0 (off) / 1 (active)
External sensor / DI2	8 (9) Holding Register	0 (not used) 1 (external temp. sensor) 2 (window contact) 3 (condensation switch)
Temperature sensor correction	9 (10) Holding Register	-30 (-3.0 K) … 30 (3.0 K)
Center set point user	10 (11) Holding Register	180 (18.0 °C) … 260 (26.0 °C)
Limits set point user	11 (12) Holding Register	0 (0.0 K) … 160 (16.0 K)

Parameters	Modbus Address (Modbus RTU)	Setting
Control	12 (13) Holding Register	0 (P) / 1 (PI)
Dead zone	13 (14) Holding Register	0 (0.0 K) … 30 (3.0 K)
Set point in dead zone	14 (15) Holding Register	0 … 100 % (50 %: center)
P-band	15 (16) Holding Register	10 (1.0 K) … 320 (32.0 K)
Integral time	16 (17) Holding Register	50 … 5000 s
Dead zone night (reduction)	18 (19) Holding Register	0 (0.0 K) … 100 (10.0 K)
Frost set point	19 (20) Holding Register	80 (8.0 °C) … 500 (50.0 °C)
DI1 function	20 (21) Holding Register	0 (off) / 1 (day/night)
DI1 operation direction	21 (22) Holding Register	0 (NC) / 1 (NO)
DI1 delay passive > active	22 (23) Holding Register	0 … 60 min
DI1 delay active > passive	23 (24) Holding Register	0 … 60 min
Duration temporary day mode	24 (25) Holding Register	1 … 480 min
Fan output scaling lower limit ***	36 (37) Holding Register	20% (example ***)
Fan usage	37 (38) Holding Register	3 (cooling and heating)

VAV heating and VAV cooling – 2 sequences

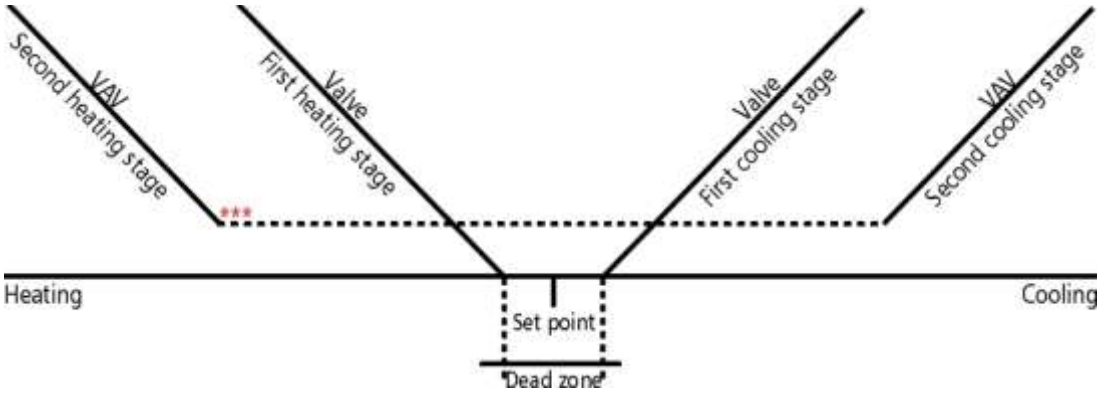

Parameters	Modbus Address (Modbus RTU)	Setting
Cooling disabled	11 (12) Coil	0 (cooling enabled)
Heating disabled	12 (13) Coil	0 (heating enabled)
Night mode	13 (14) Coil	0 (off) / 1 (on)
Cooling output	14 (15) Coil	0 (direct) / 1 (inverted)
Heating output	15 (16) Coil	0 (direct) / 1 (inverted)
Cooling sequences	16 (17) Coil	1 (2 sequences)
Cooling sequence	17 (18) Coil	0 (valve first) / 1 (VAV first)
Operation mode night	19 (20) Coil	0 (reduced (dead zone)) 1 (frost protection)
Valve jam prevention	21 (22) Coil	0 (off) / 1 (on)
Display	26 (27) Coil	0 (temperature) / 1 (set point)
Thermostat function cooling	28 (29) Coil	0 (controlled) / 1 (2 point)
Thermostat function heating	29 (30) Coil	0 (controlled) / 1 (2 point)
Cooling on Y1 (standard: Y3)	30 (31) Coil	0 (VAV) / 1 (cooling)
Heating on Y2 (standard: Y4)	31 (32) Coil	0 (fan) / 1 (heating)
Heating sequences	32 (33) Coil	1 (2 sequences)
Occupied by PIR	0 (1) Discrete Input	0 (off) / 1 (occupied by sensor)
Occupied by button	1 (2) Discrete Input	0 (off) / 1 (occupied by button)
Day extension	2 (3) Discrete Input	0 (off) / 1 (active)
External sensor / DI2	8 (9) Holding Register	0 (not used) 1 (external temp. sensor) 2 (window contact) 3 (condensation switch)
Temperature sensor correction	9 (10) Holding Register	-30 (-3.0 K) … 30 (3.0 K)
Center set point user	10 (11) Holding Register	180 (18.0 °C) … 260 (26.0 °C)
Limits set point user	11 (12) Holding Register	0 (0.0 K) … 160 (16.0 K)

Parameters	Modbus Address (Modbus RTU)	Setting
Control	12 (13) Holding Register	0 (P) / 1 (PI)
Dead zone	13 (14) Holding Register	0 (0.0 K) … 30 (3.0 K)
Set point in dead zone	14 (15) Holding Register	0 … 100 % (50 %: center)
P-band	15 (16) Holding Register	10 (1.0 K) … 320 (32.0 K)
Integral time	16 (17) Holding Register	50 … 5000 s
Dead zone night (reduction)	18 (19) Holding Register	0 (0.0 K) … 100 (10.0 K)
Frost set point	19 (20) Holding Register	80 (8.0 °C) … 500 (50.0 °C)
DI1 function	20 (21) Holding Register	0 (off) / 1 (day/night)
DI1 operation direction	21 (22) Holding Register	0 (NC) / 1 (NO)
DI1 delay passive > active	22 (23) Holding Register	0 … 60 min
DI1 delay active > passive	23 (24) Holding Register	0 … 60 min
Duration temporary day mode	24 (25) Holding Register	1 … 480 min
VAV for heating	24 (25) Holding Register	1 (on)
Min. VAV output ***	33 (34) Holding Register	20% (example ***)
Fan usage	37 (38) Holding Register	0 (fan off)

Applications

Heating with radiator and cooling with beam

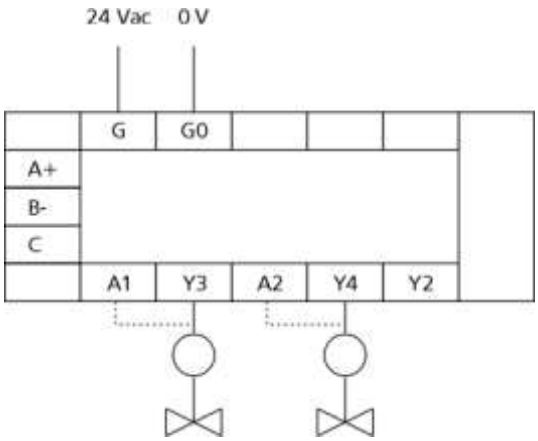

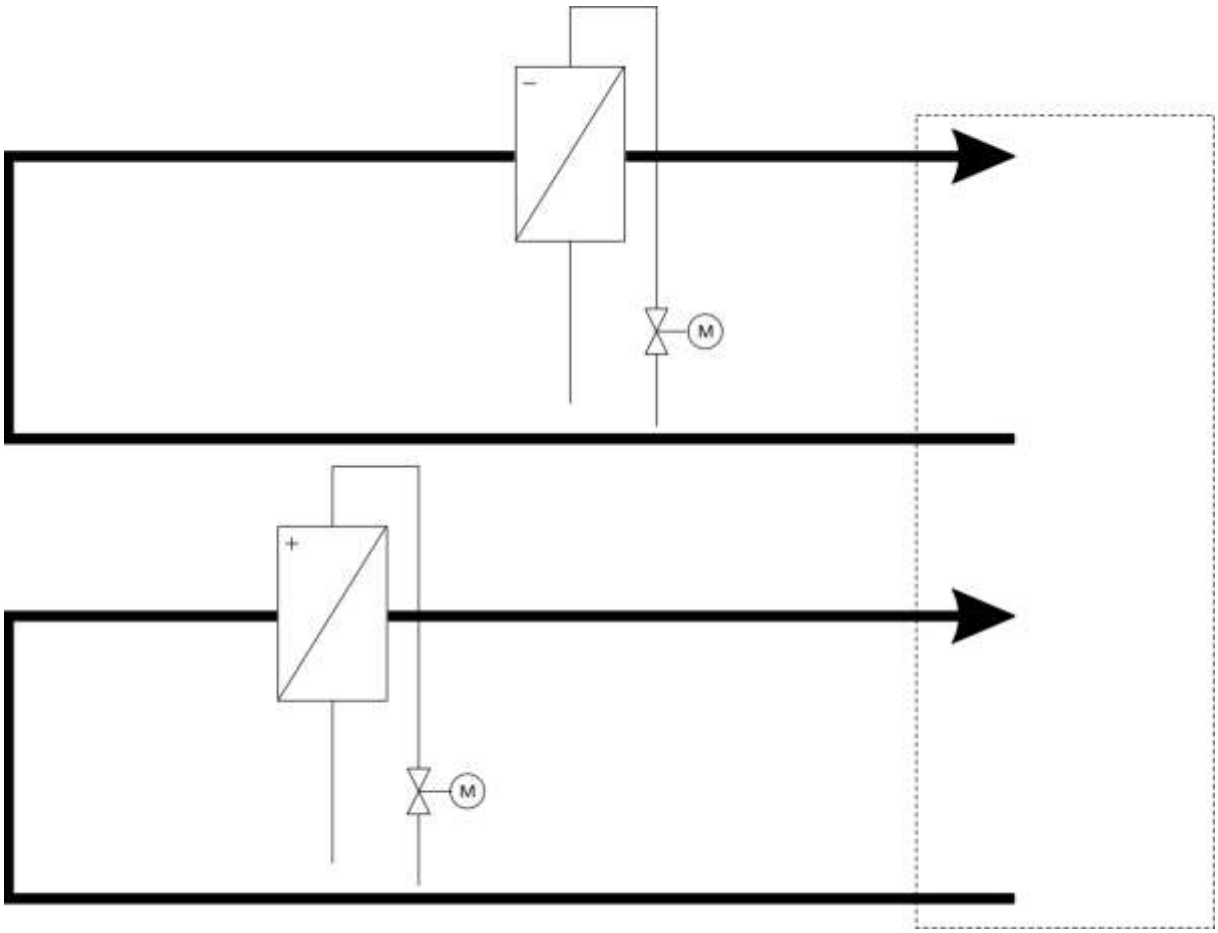

Parameters	Modbus Address (Modbus RTU)	Setting
Cooling sequences	16 (17) Coil	0 (1 sequence)
Valve jam protection	21 (22) Coil	0 (off)

Heating and cooling with fan coil

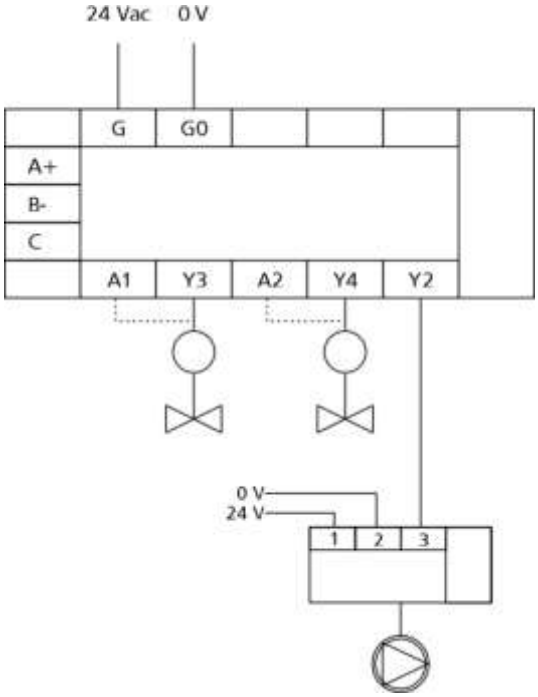

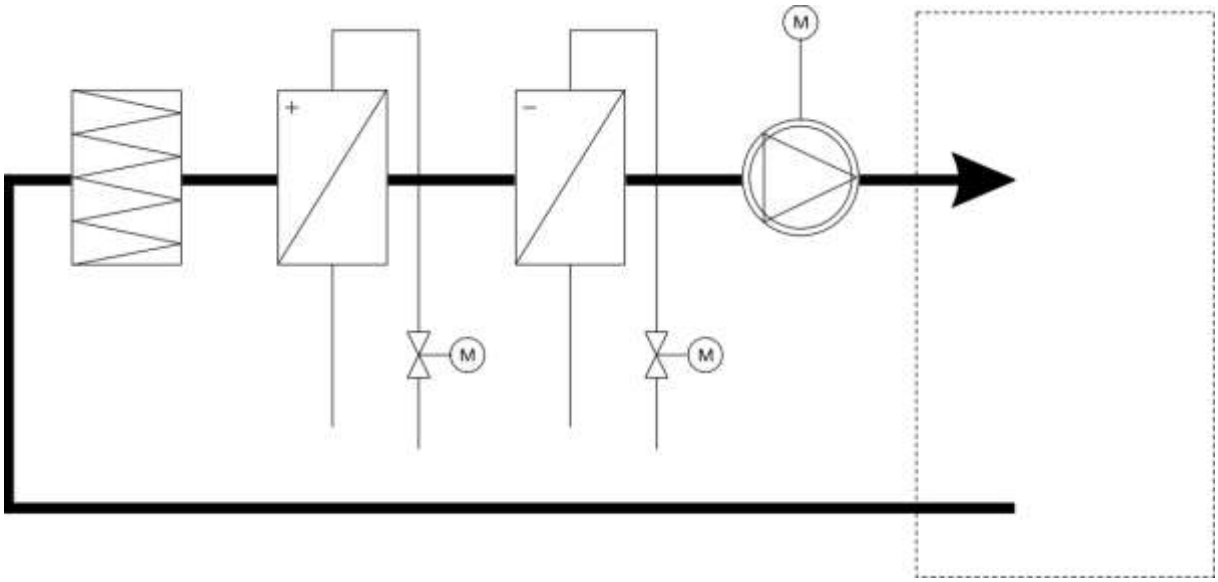

Parameters	Modbus Address (Modbus RTU)	Setting
Ext. temperature sensor	8 (9) Holding Register	0 (not connected)
Cooling sequences	16 (17) Coil	0 (1 sequence)
Cooling sequence	17 (18) Coil	0 (valve first)
Fan simultaneously with valve	18 (19) Coil	1 (on)
Max. fan value	32 (33) Holding Register	100 (%)
Max. scaling fan	35 (36) Holding Register	100 (%)
Min. scaling fan	36 (37) Holding Register	0 (%)
Fan type	22 (23) Coil	0 (3-stages)
Fan usage	37 (38) Holding Register	3 (heating and cooling)
Fan stage 3 disabled	23 (24) Coil	0 (stage 3 enabled)

Fan Control

A 3-stage or 0 ... 10VDC (EC motor) fan can be used. If the fan is controlled manually the stages represent following speeds:
0 = 0%, 1 = 33%, 2 = 66%, 3 = 100%.

If a relay module is connected to Y2 the speed of a fan coil or 3-stages fan can be controlled. For example, if the parameter "Fan Usage" = 1 (On) and the parameter "Fan Type" = 1 (EC fan), the fan works like this:

- If the temperature reaches the set point (lower end of the dead zone), the valve closes and the fan stops after 5 minutes.
- If the temperature goes below the lower end of the dead zone, the valve starts to open and the fan is controlled to stage 1 (Y2 = 33%).
- If the temperature continues to decrease, the valve opens over 70% and the fan is controlled to stage 2 (Y2 = 66%).
- If the temperature still continues to decrease, the valve opens over 90% and the fan is controlled to stage 3 (Y2 = 100%).

Valve opens before the fan speed increases

- If the parameter "Fan simultaneously with valve" = 1 (On), the EC fan connected to Y2 works simultaneously with the cooling or heating valve. The fan starts when the valve starts to open and the fan works on full speed when the valve is fully open. The fan is controlled linearly between the low and high limits.
- The fan works 5 minutes after the valve is fully closed using the speed defined in parameter "Scaling fan min.".

- If the parameter "Fan simultaneously with valve" = 0 (Off) the 3-stage fan works on stage 1 and the valve starts to open to 100%. The fan is then controlled to stage 2 and 3 if necessary.

Heating with radiator, cooling with VAV and beam, fan on demand (CO_2)

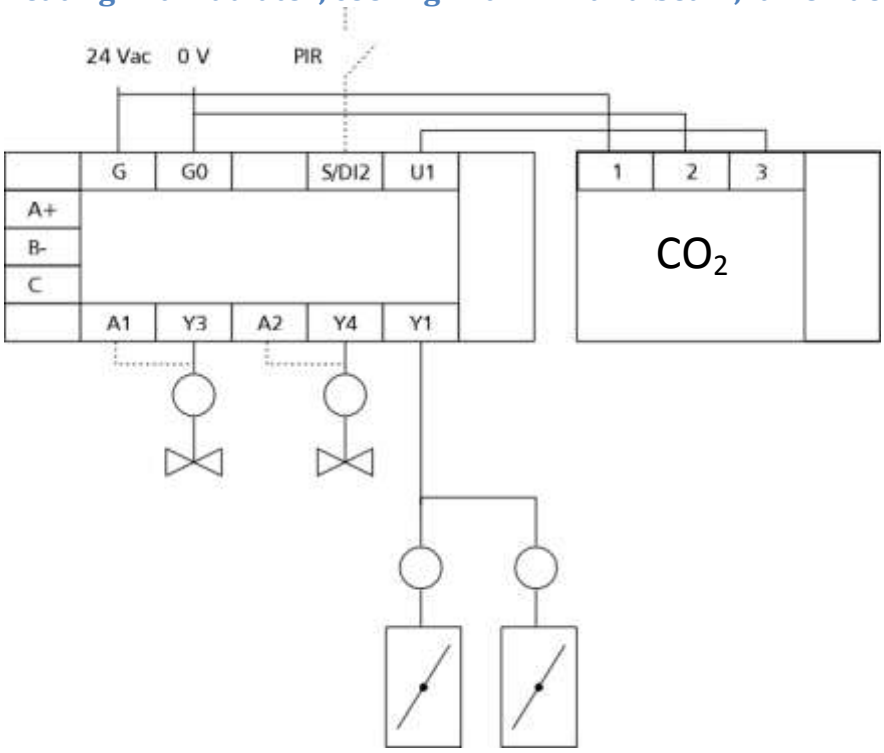

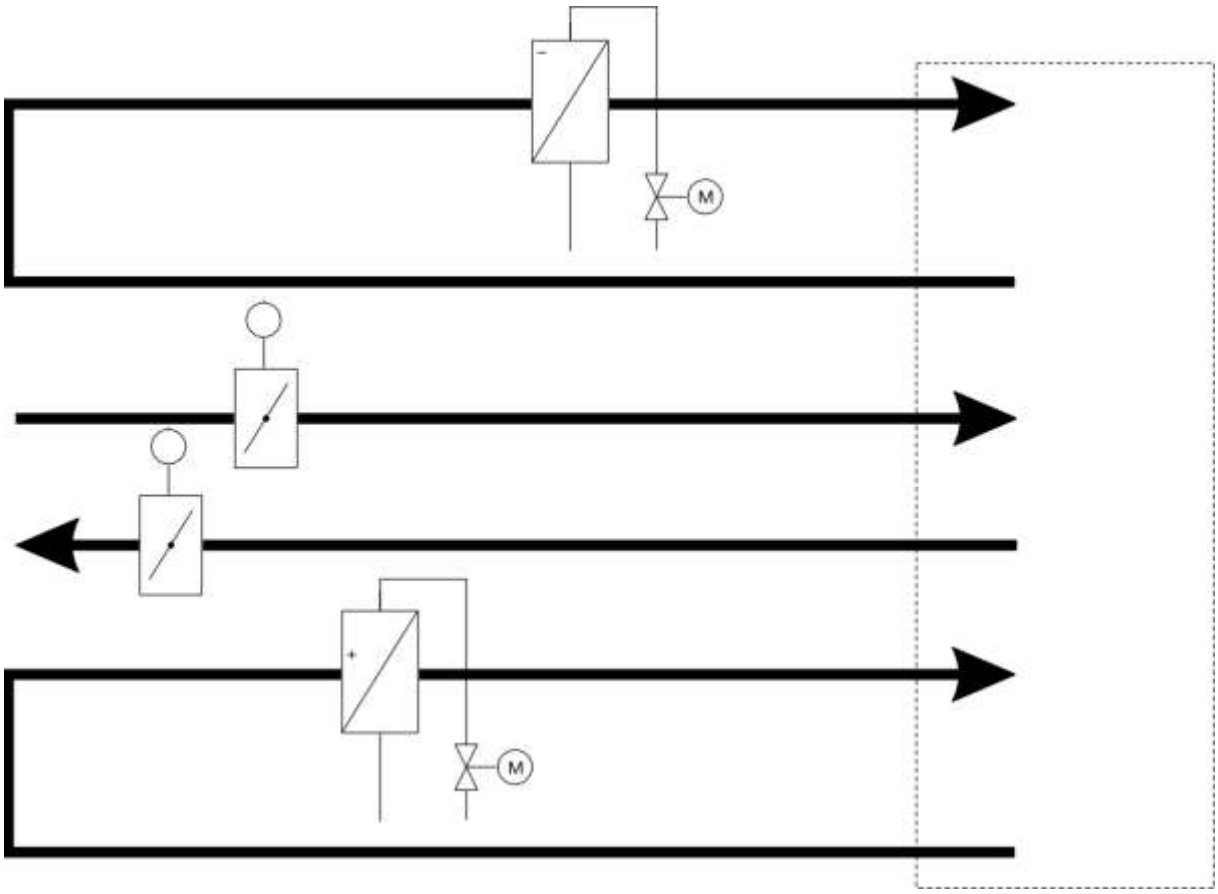

Parameters	Modbus Address (Modus RTU)	Setting
Cooling sequences	16 (17) Coil	0 (1 sequence)
Cooling sequence	17 (18) Coil	0 (valve first)
Valve jam protection	21 (22) Coil	0 (off)
VAV minimum value	33 (34) Holding Register	0 (%)

If CO_2 measurement or PIR (presence detection) is used:

Parameters	Modbus Address (Modbus RTU)	Setting
Universal input 1	26 (27) Holding Register	1 (CO_2 measurement)
Lower limit P-band for CO_2	38 (39) Holding Register	700 (ppm)
Upper limit P-band for CO_2	39 (40) Holding Register	1250 (ppm)
Fresh air control	17 (18) Holding Register	2 (CO_2)
Minimum value VAV day	25 (26) Holding Register	0 (%)

CO_2 concentration based fresh air usage requires following parameters:

Fresh air control: 0 (CO_2/T) or 2 (CO_2)

Universal input 1: 1 (CO_2 measurement)

The CO_2 transmitter has to be connected to universal input 1.

Fresh air control in day mode:

Fresh air control: 1 (Day/T) or 3 (Day)

Day mode control: PIR, Modbus or "Man In House" key.

Thermostat mode

If thermostat mode is chosen the actuators are controlled using the thermostat. The thermostat mode can be activated either for cooling or heating or for both.

- If the thermostat mode is activated for heating the heating valve opens fully if the temperature goes below the lower end of the dead zone. The valve closes as soon as the temperature has reached the set point.

- If the thermostat mode is activated for cooling the cooling valve opens fully if the temperature goes over the upper end of the dead zone. The valve closes as soon as the temperature has reached the set point.

In the night mode the controller works in the chosen function – thermostat or frost protection.

The thermostat mode affects the outputs A1, A2, Y3 and Y4.

Actuator functions:

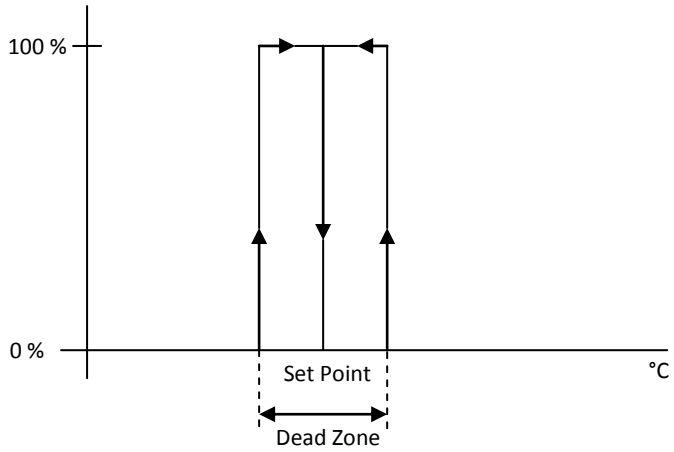

Parameter	Modbus Address (Modbus RTU)	Setting
External temperature sensor	8 (9) Holding Register	0 (not used)
Center user set point	10 (11) Holding Register	21 (°C)
Limits user set point	11 (12) Holding Register	+/- 3 (K)
Dead zone	13 (14) Holding Register	0.2 (°C)
Operation mode night	19 (20) Coil	0 (dead zone)
Fan usage	37 (38) Holding Register	0 (not used)
Minimum fan	31 (32) Holding Register	0 (%)
Maximum fan	32 (33) Holding Register	100 (%)
Minimum VAV	33 (34) Holding Register	0 (%)
Maximum VAV	34 (35) Holding Register	100 (%)
Thermostat function cooling	28 (29) Coil	0 (P/PI)
Thermostat function heating	29 (30) Coil	0 (P/PI)

Control of the day and night mode

- If the parameter "Night mode" = Off, the controller is fixed to day mode.

- Parameter "Night mode" = On: The controller changes to day mode as soon as the first parameter requests the day mode and it changes to night mode when the last parameter stops the request for day mode.

Example:

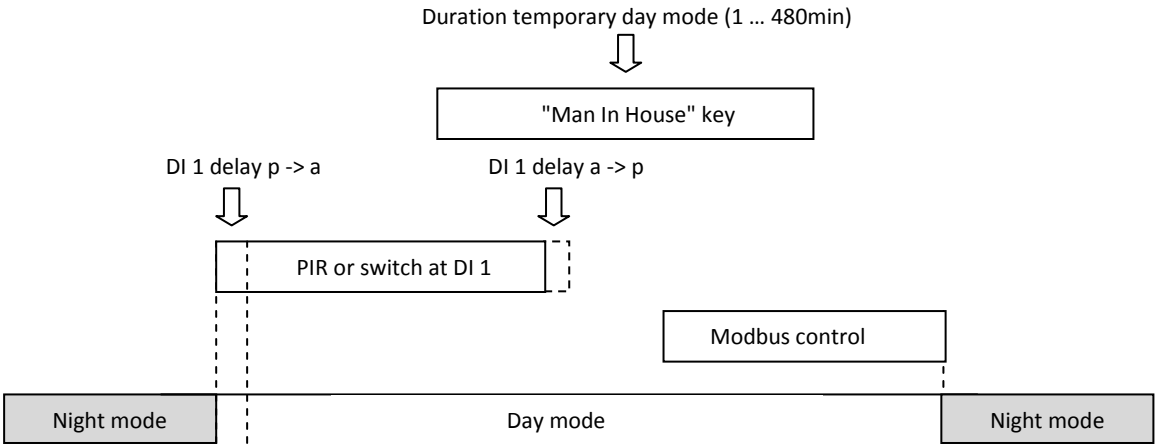

Parameter	Modbus Address (Modbus RTU)	Setting
External temperature sensor	8 (9) Holding Register	0 (not used)
DI2 operation direction	27 (28) Coil	1 (NO)
DI1 mode	20 (21) Holding Register	0 (not used)
DI1 operation direction night mode	21 (22) Holding Register	0 (NC)
DI1 delay passive -> active	22 (23) Holding Register	0 (0 minutes)
DI1 delay active -> passive	23 (24) Holding Register	5 (5 minutes)
Duration temporary day mode	24 (25) Holding Register	120 (120 minutes)
Min. VAV in day mode	25 (26) Holding Register	0 (0 %)
Eff. set point night -> day	20 (21) Coil	Off (user value)
Night mode	13 (14) Coil	Off (day mode)

Change of the controller to day mode

- Improvement of the fresh air usage (Parameter "Min. VAV in day mode" defines the improvement (0 … 100%)). The value 0% disables the fresh air improvement.
- The temperature set point defined in "Effective set point night -> day mode" is used.
- The dead zone for the day mode is used and the controller changes from a possible frost protection mode to the control mode.

Frost protection function in night mode

If the temperature falls below the value defined in parameter "Frost protection thermostat set point" the heating valve opens and the fan works on stage 1 (33%). The parameter "Fan usage" has to be set to 2 (heating) or 3 (heating and cooling).

If the temperature rises 2 °C over the value "Frost protection thermostat set point "the heating valve closes and the fan stops. This procedure is executed until the controller changes to day mode.

Night mode

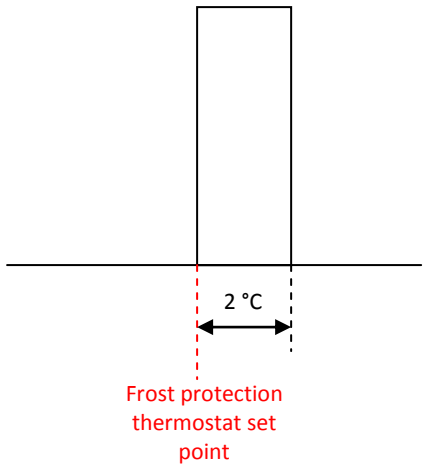

Parameter	Modbus Address (Modbus RTU)	Setting
External temperature sensor	8 (9) Holding Register	0 (not used)
Operation mode night	19 (20) Coil	0 (dead zone)
Frost protection thermostat set point	19 (20) Holding Register	17 (°C)

Temperature set point

The temperature set point can be one of the following:

- Set with the controller keys (see parameters "Center user set point" and "Limits user set point").
- External temperature set point (Universal input 1 0 ... 10 VDC). Parameter "U1 mode" has to be 2.
- Set point via Modbus.
- Frost protection thermostat set point in night mode if the parameter "operation mode night" is set to 1 (Frost).

The change from night mode to day mode affects also the temperature set point. The parameter "Effective set point night -> day" defines whether the latest user defined set point or the Modbus set point should be used. The user set point can be the set point from the universal input 1 (0 ... 10 VDC) or the set point defined with the controller keys.

Parameter	Modbus Address (Modbus RTU)	Setting
Center user set point	10 (11) Holding Register	21 (°C)
Limits user set point	11 (12) Holding Register	+/- 3 (°C)
Set point position in dead zone	14 (15) Holding Register	50 (%)
Frost protection thermostat set point	19 (20) Holding Register	17 (°C)
Effective set point night -> day	20 (21) Coil	0 (user value)
U1 mode	26 (27) Holding Register	0 (not used)
Display	26 (27) Coil	0 (temperature)

If the parameter "Center user set point" is changed via Modbus the value "Set point deviation user" is kept unchanged.

Example:

- The center user set point is 21 °C and the user has changed the value to 23 °C (Set point deviation user = +2 °C).
- The center user set point is changed via Modbus to 22 °C (Holding Register 11).
- The controller uses 24 °C as effective set point (22 °C + 2°C).

Examples:

The set point should be kept on a constant value of 21 °C when the controller changes from night to day mode.

Parameter	Modbus Address (Modbus RTU)	Setting
Effective set point night -> day	20 (21) Coil	1 (Modbus value)
Set point Modbus	1 (2) Holding Register	21 (°C)

The set point should be set to the latest value set by the user when the controller changes from night to day mode.

Parameter	Modbus Address (Modbus RTU)	Setting
Effective set point night -> day	20 (21) Coil	0 (user value)

The set point should be kept on the value set by Modbus.

Parameter	Modbus Address (Modbus RTU)	Setting
Center user set point	10 (11) Holding Register	21 (°C)
Limits user set point	11 (12) Holding Register	+/- 0 (°C)

Overriding the outputs

All outputs can be overridden by Modbus.
Presentation of the register addresses: Example: 0 (1)
0: Address for the Modbus protocol
(1): Address for the Modbus RTU protocol

Coils

Register	Description	Data type	Range	Default
0 (1)	Enable override PWM cooling	Bit	AUS / EIN	AUS
1 (2)	Enable override 0-10V cooling	Bit	AUS / EIN	AUS
2 (3)	Enable override PWM heating	Bit	AUS / EIN	AUS
3 (4)	Enable override 0-10V heating	Bit	AUS / EIN	AUS
4 (5)	Enable override VAV	Bit	AUS / EIN	AUS
5 (6)	Enable override fan	Bit	AUS / EIN	AUS

Holding Register

Register	Description	Data type	Range	Meaning
0 (1)	Fan speed Modbus	SINT16	0 … 4	Off, 1, 2, 3, Automatic
2 (3)	Override cooling PWM Modbus (A1) %	SINT16	0 … 1000	0.00 … 100.0
3 (4)	Override cooling 0 - 10V Modbus (Y3) %	SINT16	0 … 1000	0.00 … 100.0
4 (5)	Override heating PWM Modbus (A2) %	SINT16	0 … 1000	0.00 … 100.0
5 (6)	Override heating 0 - 10V Modbus (Y4) %	SINT16	0 … 1000	0.00 … 100.0
6 (7)	Override VAV Modbus (Y1) %	SINT16	0 … 1000	0.00 … 100.0
7 (8)	Override fan Modbus (Y2) %	SINT16	0 … 1000	0.00 … 100.0
27 (28)	Minimum cooling %	SINT16	0 … 500	0 … 50
28 (29)	Maximum cooling %	SINT16	500 … 1000	50 … 100
29 (30)	Minimum heating %	SINT16	0 … 500	0 … 50
30 (31)	Maximum heating %	SINT16	500 … 1000	50 … 100
31 (32)	Minimum fan %	SINT16	0 … 500	0 … 50
32 (33)	Maximum fan %	SINT16	500 … 1000	50 … 100
33 (34)	Minimum VAV %	SINT16	0 … 500	0 … 50
34 (35)	Maximum VAV %	SINT16	500 … 1000	50 … 100

Modbus Registers

Coils

Register	Description	Data type	Range	Default	Description / Function
0 (1)	Enable override PWM cooling	Bit	OFF/ON	OFF	Allows to override the digital cooling output
1 (2)	Enable override 0-10V cooling	Bit	OFF/ON	OFF	Allows to override the analog cooling output
2 (3)	Enable override PWM heating	Bit	OFF/ON	OFF	Allows to override the digital heating output
3 (4)	Enable override 0-10V heating	Bit	OFF/ON	OFF	Allows to override the analog heating output
4 (5)	Enable override VAV	Bit	OFF/ON	OFF	Allows to override the analog VAV output
5 (6)	Enable override fan	Bit	OFF/ON	OFF	Allows to override the analog fan output
6 (7)	---	Bit			
7 (8)	---	Bit			
8 (9)	---	Bit			
9 (10)	---	Bit			
10 (11)	Service alarm reset	Bit	OFF/ON	OFF	Resets service alarms
11 (12)	Cooling disabled	Bit	OFF/ON	OFF	Allows to disable cooling (ON)
12 (13)	Heating disabled	Bit	OFF/ON	OFF	Allows to disable heating (ON)
13 (14)	Night mode	Bit	OFF/ON	OFF	
14 (15)	Cooling output (0: direct, 1: inverse)	Bit	OFF/ON	direct	Allows to invert the cooling output
15 (16)	Heating output (0: direct, 1: inverse)	Bit	OFF/ON	direct	Allows to invert the heating output
16 (17)	Cooling sequences (0: 1 sequence, 1: 2 sequences)	Bit	OFF/ON	1 sequence	Number of cooling sequences
17 (18)	Cooling sequence (0: valve first, 1: VAV first)	Bit	OFF/ON	Valve first	Order of the cooling sequences
18 (19)	Fan simultaneously with valve	Bit	OFF/ON	OFF	The fan can change its speed simultaneously with the valve or delayed
19 (20)	Operation mode night (0: dead zone, 1: frost)	Bit	OFF/ON	Dead zone	Night mode with reduced set point or frost control
20 (21)	Effective set point after night to day mode change (0: user value, 1: Modbus value)	Bit	OFF/ON	User value	Used set point when changing from night to day mode
21 (22)	Valve jam protection	Bit	OFF/ON	OFF	If ON, the valve will be opened and closed once per day for five minutes

Register	Description	Data type	Range	Default	Description / Function
22 (23)	Fan type (0: 3-stages, 1: EC)	Bit	OFF/ON	3-stages	3-stages or analog fan
23 (24)	Fan stage 3 disabled	Bit	OFF/ON	OFF	If ON, only stages 1 and 2 are used
24 (25)	Effective fan stage after night to day mode change (0: user value, 1: Modbus value)	Bit	OFF/ON	User value	Used fan stage when changing from night to day mode
25 (26)	VAV for heating	Bit	OFF/ON	OFF	ON: Use VAV also for heating
26 (27)	Display (0: temperature, 1: set point)	Bit	OFF/ON	Temperature	Value to be shown on the display
27 (28)	DI2 operation direction (0: NC, 1: NO)	Bit	OFF/ON	NO	DI2 normally closed or normally open
28 (29)	Thermostat function cooling (0: P/PI, 1: thermostat)	Bit	OFF/ON	P/PI	Cooling output controlled or in 2-point mode
29 (30)	Thermostat function heating (0: P/PI, 1: thermostat)	Bit	OFF/ON	P/PI	Heating output controlled or in 2-point mode
30 (31)	Y1 for cooling (0: VAV)	Bit	OFF/ON	VAV	If no VAV is available, Y1 can be used for cooling
31 (32)	Y2 for heating (0: fan)	Bit	OFF/ON	Fan	If no fan is available, Y2 can be used for heating
32 (33)	Heating sequences (0: 1 sequence, 1: 2 sequences)	Bit	OFF/ON	1 sequence	Number of heating sequences

Discrete Inputs

Register	Description	Data type	Range	Default	Description / Function
0 (1)	Occupied by PIR	Bit	OFF/ON		Displays occupied mode if the PIR sensor is activated
1 (2)	Occupied by occupied button	Bit	OFF/ON		Displays occupied mode if button is pressed
2 (3)	Day extension	Bit	OFF/ON		Displays occupied mode during day extension
3 (4)	DI1 state	Bit	OFF/ON		State of the digital input 1
4 (5)	DI2 state	Bit	OFF/ON		State of the digital input 2
5 (6)	CO_2 override	Bit	OFF/ON		Displays CO_2 override

Input Registers

Register	Description	Data type	Range	Meaning	Description / Function
0 (1)	---	UINT16			
1 (2)	---	UINT16			
2 (3)	---	UINT16			
3 (4)	Temperature °C	SINT16	-600 … 600	-60.0 … 60.0	Current temperature of the internal sensor
4 (5)	External temperature sensor °C	SINT16	-600 … 600	-60.0 … 60.0	Current temperature of the external sensor
5 (6)	CO_2 ppm	SINT16	0 … 2000	0 … 2000	Current amount of CO_2 in the room
6 (7)	Effective set point °C	SINT16	50 … 500	5.0 … 50.0	Current room set point
7 (8)	Current cooling %	SINT16	0 … 1000	0.0 … 100.0	Current cooling percentage
8 (9)	Current heating %	SINT16	0 … 1000	0.0 … 100.0	Current heating percentage
9 (10)	Current fan stage	SINT16	0 … 4	Off, 1, 2, 3, Automatic	Current fan activity
10 (11)	Fan speed (Y2) %	SINT16	0 … 1000	0.0 … 100.0	Current fan speed
11 (12)	VAV (Y1) %	SINT16	0 … 1000	0.0 … 100.0	Current VAV output
12 (13)	Cooling (Y3) %	SINT16	0 … 1000	0.0 … 100.0	Current cooling output at Y3 (analog)
13 (14)	Heating (Y4) %	SINT16	0 … 1000	0.0 … 100.0	Current heating output at Y4 (analog)
14 (15)	U1 input value V	SINT16	0 … 1000	0.0 … 10.00	Current value at universal input 1
15 (16)	External temperature sensor (connector) °C	SINT16	-600 … 600	-60.0 … 60.0	Current value at input S/DI2 if used as an NTC input
16 (17)	VAV control (0: CO_2, 1: Tmp, 2: PIR)	SINT16	0 … 2	0 … 2	
17 (18)	Set point by user °C	SINT16	x … y	x/10 … y/10	Set point adjusted by the user
18 (19)	Fan stage by user	SINT16	0 … 4	Off, 1, 2, 3, Automatic	Fan stage set by the user
19 (20)	Set point deviation by user °C	SINT16	x … y	x/10 … y/10	Deviation between user set point and room temperature
20 (21)	Cooling (A1) %	SINT16	0 … 1000	0.0 … 100.0	Current output cooling at A1 (digital)
21 (22)	Heating (A2) %	SINT16	0 … 1000	0.0 … 100.0	Current output heating at A2 (digital)

Holding Registers

Register	Description	Data type	Value	Meaning	Default	Description / Function
0 (1)	Fan speed by Modbus	SINT16	0 … 4	Off, 1, 2, 3, Automatic	0	Fan speed set by Modbus
1 (2)	Set point by Modbus °C	SINT16	80 … 500	8.0 … 50.0	210	Set point set by Modbus
2 (3)	Override cooling PWM Modbus (A1) %	SINT16	0 … 1000	0.0 … 100.0	0	Override cooling at A1 depending on coil 0 (1)
3 (4)	Override cooling 0 - 10V Modbus (Y3) %	SINT16	0 … 1000	0.0 … 100.0	0	Override cooling at Y3 depending on coil 1 (2)
4 (5)	Override heating PWM Modbus (A2) %	SINT16	0 … 1000	0.0 … 100.0	0	Override heating at A2 depending on coil 2 (3)
5 (6)	Override heating 0 - 10V Modbus (Y4) %	SINT16	0 … 1000	0.0 … 100.0	0	Override heating at Y4 depending on coil 3 (4)
6 (7)	Override VAV Modbus (Y1) %	SINT16	0 … 1000	0.0 … 100.0	0	Override VAV at Y1 depending on coil 4 (5)
7 (8)	Override fan Modbus (Y2) %	SINT16	0 … 1000	0.0 … 100.0	0	Override fan at Y2 depending on coil 5 (6)
8 (9)	External temperature sensor / DI2 input	SINT16	0 … 3	0 … 3	0	0: not used 1: external temperature sensor 2: door / window contact 3: condensation switch
9 (10)	Temp. sensor correction °C	SINT16	-30 … 30	-3.0 … 3.0	0	Adjustment of the internal temperature sensor
10 (11)	Center of user set point °C	SINT16	180 … 260	18.0 … 26.0	210	Set point which can be changed by the user
11 (12)	Limits of user set point °C	SINT16	0 … 160	0.0 … 16.0	30	+/- limits for the user setpoint
12 (13)	Control	SINT16	0 … 1	P … PI	1	Type of control, P or PI
13 (14)	Dead zone	SINT16	0 … 30	0.0 … 3.0	2	Dead zone – no control in this area
14 (15)	Set point position in dead zone %	SINT16	0 … 100	0.0 … 100.0	50	50%: Set point is in the center of the dead zone
15 (16)	Proportional band °C	SINT16	10 … 320	1.0 … 32.0	10	P band of the loop
16 (17)	Integration time s	SINT16	50 … 5000	50 … 5000	300	Integration time of the loop
17 (18)	Fresh air control (0: CO_2/T, 1: Tag/T, 2: CO_2, 3: Day)	SINT16	0 … 3	0 … 3	0	
18 (19)	Dead zone night mode °C	SINT16	0 … 100	0.0 … 10.0	60	Reduction for night mode

Register	Description	Data type	Value	Meaning	Default	Description / Function
19 (20)	Frost protection thermostat set point °C	SINT16	80 … 500	8.0 … 50.0	170	Set point for frost protection
20 (21)	DI1 Modus (0: not used, 1: Day / night change)	SINT16	0 … 1	0 … 1	0	Usage of the digital input 1
21 (22)	DI1 operation direction (0: NC, 1: NO)	SINT16	0 … 1	0 … 1	0	Input normally closed (NC) or normally open (NO)
22 (23)	DI1 delay passive -> active min	SINT16	0 … 60	0 … 60	0	Delay time when input is closed
23 (24)	DI1 delay active -> passive min	SINT16	0 … 60	0 … 60	5	Delay time when input is opened
24 (25)	Duration of temporary day mode min	SINT16	1 … 480	1 … 480	120	Temporary day mode duration when activated by PIR or occupied button
25 (26)	Min. VAV in day mode %	SINT16	0 … 1000	0 … 100	0	
26 (27)	U1 mode (0: not used, 1: CO_2, 2: set point, 3: temperature)	SINT16	0 … 3	0 … 3	0	Function of the 0 – 10V input
27 (28)	Minimum cooling %	SINT16	0 … 500	0 … 50	0	
28 (29)	Maximum cooling %	SINT16	500 … 1000	50 … 100	1000	
29 (30)	Minimum heating %	SINT16	0 … 500	0 … 50	0	
30 (31)	Maximum heating %	SINT16	500 … 1000	50 … 100	1000	
31 (32)	Minimum fan %	SINT16	0 … 500	0 … 50	0	
32 (33)	Maximum fan %	SINT16	500 … 1000	50 … 100	1000	
33 (34)	Minimum VAV %	SINT16	0 … 500	0 … 50	0	
34 (35)	Maximum VAV %	SINT16	500 … 1000	50 … 100	1000	
35 (36)	Scaling fan max %	SINT16	0 … 1000	0 … 100	1000	
36 (37)	Scaling fan min %	SINT16	0 … 1000	0 … 100	0	
37 (38)	Fan usage (0: not used, 1: cooling, 2: heating, 3: heating & cooling)	SINT16	0 … 3	0 … 3	0	
38 (39)	Lower limit P-band for CO_2 control ppm	SINT16	400 … 1000	400 … 1000	700	
39 (40)	Upper limit P-band for CO_2 control ppm	SINT16	500 … 2000	500 … 2000	1250	