ELESTA
building automation

Room Control Unit

RCO ER450A00

Contents

Keys / Display 3
Jumpers / LEDs 3
Assembly Information 4
Controller Commissioning 5
Interface Parameter Settings 5
Terminal Connections 6
Controller Function 6
Manual Setting Of The Controller Parameters 7
Commissioning 9
- Modbus RTU 1st Version 9
- Modbus RTU 2nd Version 11

Control Methods 15
- Winter mode (heating) 15
- Summer mode (cooling) 15
- Valve opens before the fan speed increases (figure: winter mode) 16
- Set point night mode (figure: winter mode) 16

Applications 17
- Heating and cooling with 2-pipe fan coil unit 17
- Floor heating and cooling, fan on demand (CO_2) 19
- Heating and cooling with beam, fan on demand (CO_2) 21
- Supply air heating with min / max limitation, fan on demand (CO_2) 23
- Changing the floor temperature set point in user mode 24
- Thermostat mode 25
- Control of the day and night mode 26
- Temperature set point 27

Modbus Registers 29
- Coils 29
- Discrete Inputs 30
- Input Registers 30
- Holding Registers 31

Keys / Display

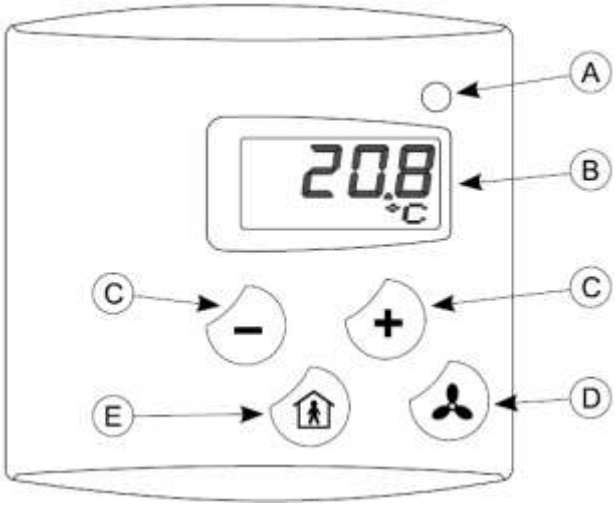

A LED
- Green: Cooling
- Red: Heating

B Display
- Temperature / Set point
- Fan stage

C Set Point Adjustment

D Fan Control
- 0: Off
- 1: Stage 1
- 2: Stage 2
- 3: Stage 3
- A: Automatic

E Occupied Button

Jumpers / LEDs

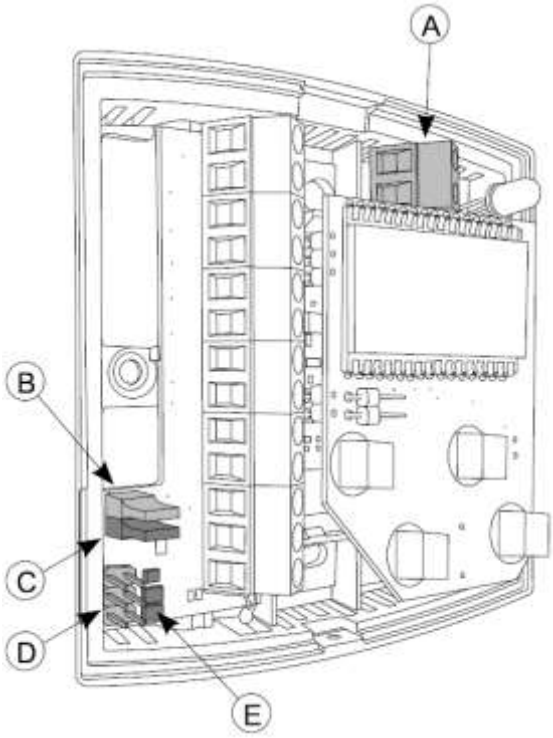

A Connector for external temperature sensor / digital contact

B Bus termination (120 Ω)
- Closed: Terminated
- Open: Not terminated

C Configuration
- Closed: Configuration mode
- Open: User mode

D Connector for Setup Tool

E LEDs
- Green PWR: Supply power OK
- Yellow TX: Controller transmits
- Yellow RX: Bus activity

Assembly Information

Device can be fitted with screws on inside wall (IP20) or a junction box. Suitable fitting information is shown on pictures above.

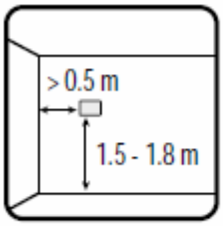

Suitable fitting dimensions (height and minimum distance from corner.

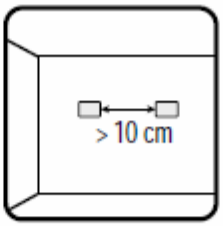

Minimum distance between two separate transmitters on the same wall.

Fitting location of the device should be chosen with care. All error factors which affects to the measurement, must be prevented well as possible. For example:

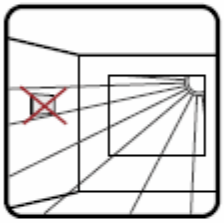

Do not fit in a location where the sun can shine directly.

Do not fit in a location where people's continued presence affects the measurement.

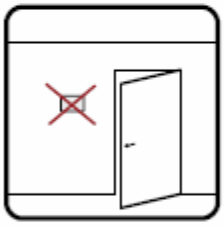

Do not fit near doors and windows.

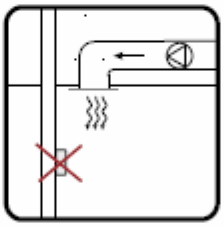

Do not fit in a location where air duct can affect the measurement.

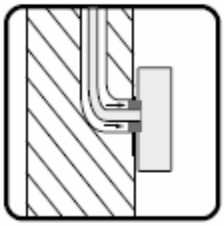

Prevent air flow from the flush mounting box.

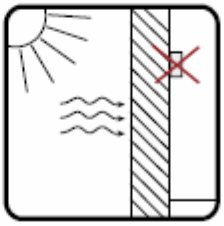

Do not install on outer wall.

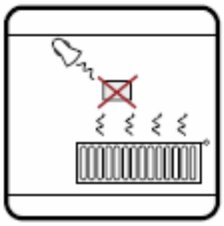

Do not fit in location where heating coil or direct lighting affects the measurement

Controller Commissioning

- Open the controller by pressing the upper clip.
- Connect 24VAC /24VDC to the terminals G and G0. If 24VDC is used only the 0 ... 10 VDC outputs are controlled.
- Connect the Modbus terminals A+, B- and C to the terminals of the RCO controller (COM3 or COM4).
- Connect the inputs and outputs.

Interface Parameter Settings

- Close jumper C (configuration mode)
- Set parameters (19.2 kBit/s, even parity) using the keys <Occupied> and <Fan Control>. Maximum number of Room Control Units on the bus: 32.
- Select menu with , accept values with .
- Set values using the **-** and **+** buttons.
- Open jumper C (user mode).
- Close housing

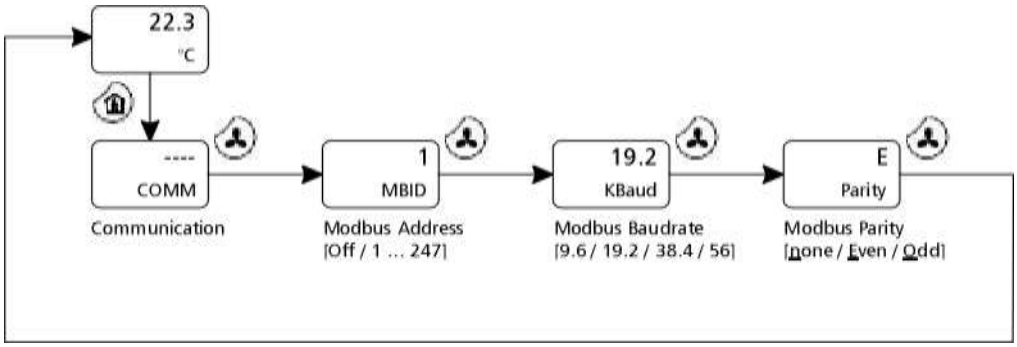

The Room Control Unit uses the **Modbus RTU** protocol. Following function codes are supported:

0x01	Read Coils
0x02	Read Discrete Inputs
0x03	Read Holding Registers
0x04	Read Input Registers
0x05	Write Single Coil
0x06	Write Single Register
0x0F	Write Multiple Coils
0x10	Write Multiple Registers

Terminal Connections

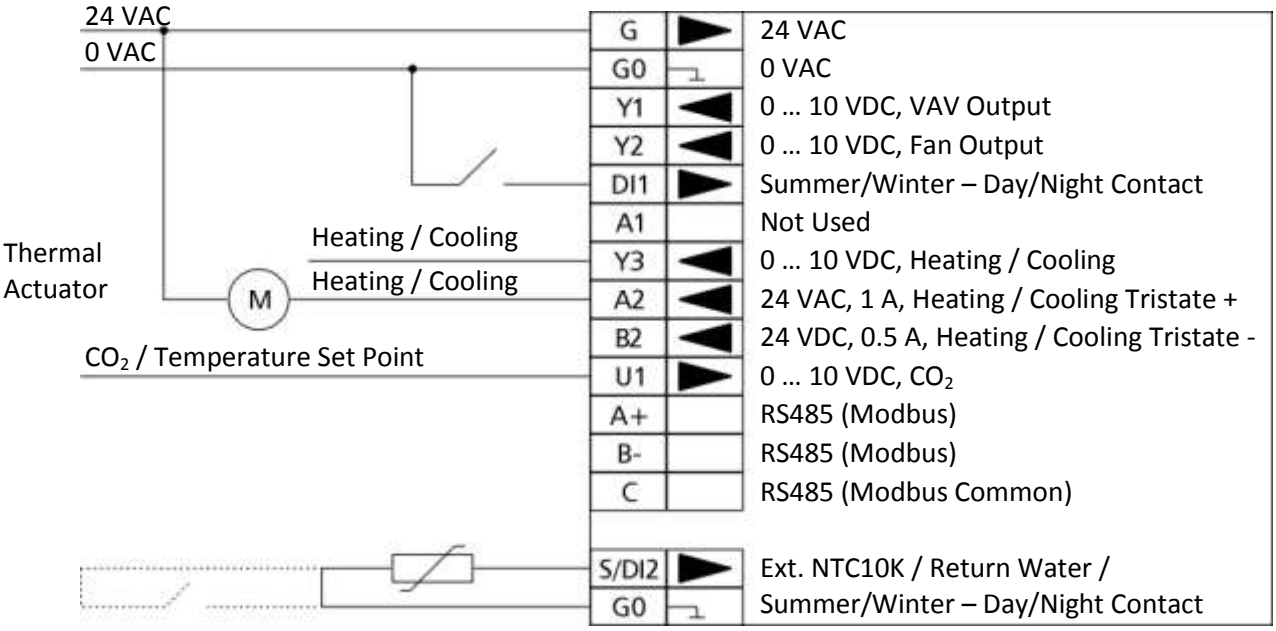

Controller Function

The Room Control Unit can be used in a 2-pipe system with changeover. For 4-pipe systems the ER 440 has to be used.

Manual Setting Of The Controller Parameters

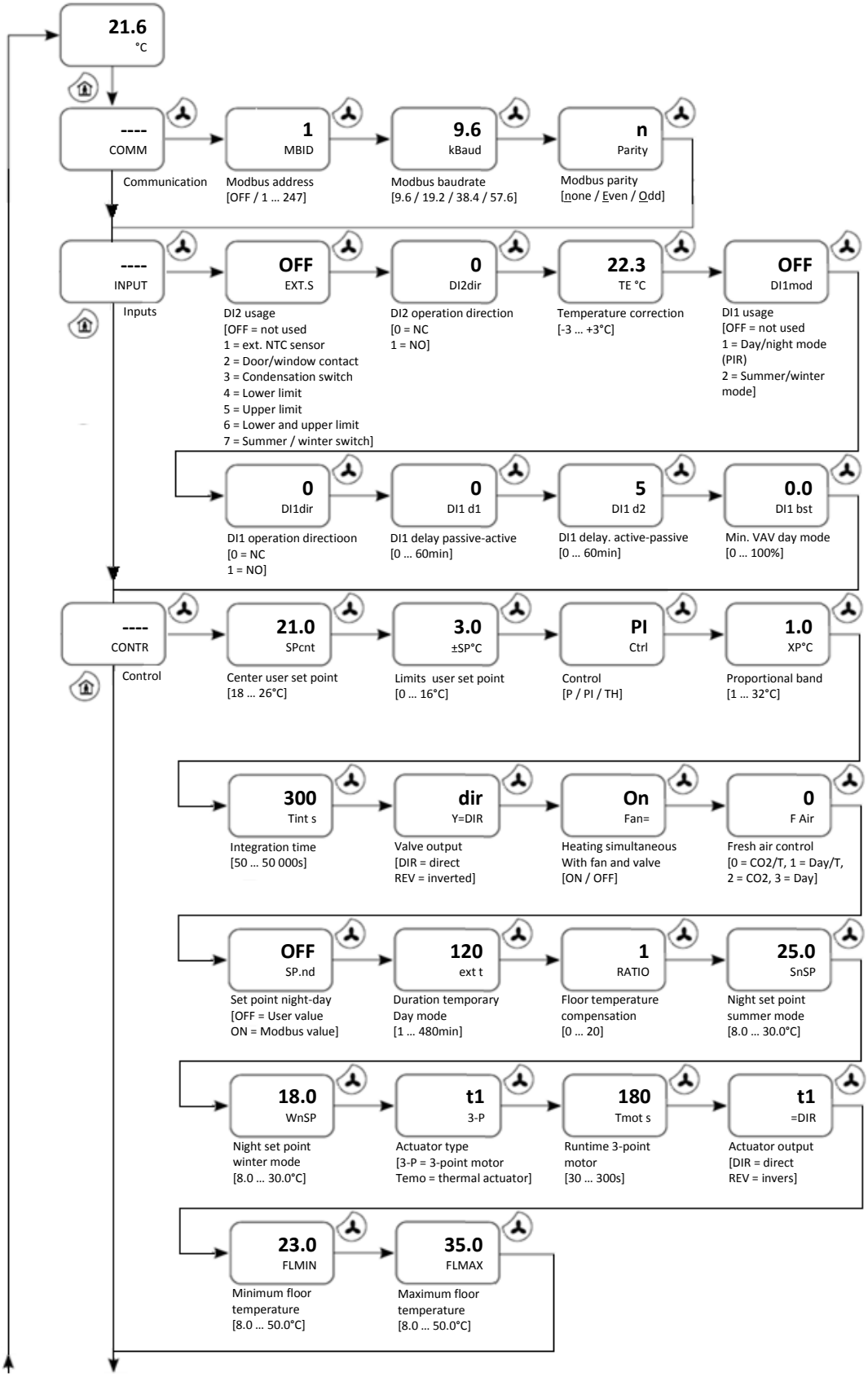

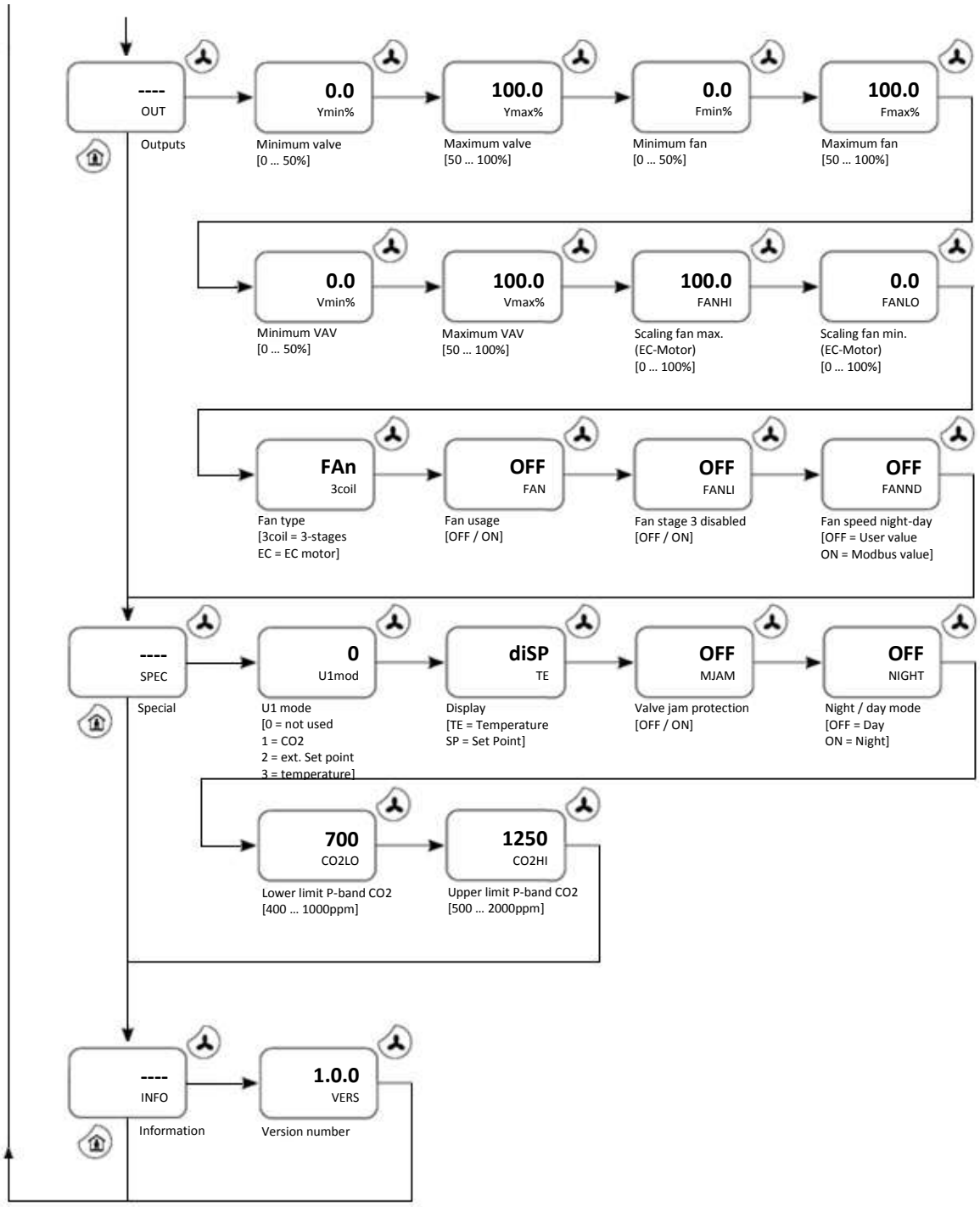
---- OUT
Outputs
0.0 Ymin%
Minimum valve [0 ... 50%]
100.0 Ymax%
Maximum valve [50 ... 100%]
0.0 Fmin%
Minimum fan [0 ... 50%]
100.0 Fmax%
Maximum fan [50 ... 100%]
0.0 Vmin%
Minimum VAV [0 ... 50%]
100.0 Vmax%
Maximum VAV [50 ... 100%]
100.0 FANHI
Scaling fan max. (EC-Motor) [0 ... 100%]
0.0 FANLO
Scaling fan min. (EC-Motor) [0 ... 100%]
FAn 3coil
Fan type [3coil = 3-stages EC = EC motor]
OFF FAN
Fan usage [OFF / ON]
OFF FANLI
Fan stage 3 disabled [OFF / ON]
OFF FANND
Fan speed night-day [OFF = User value ON = Modbus value]
---- SPEC
Special
0 U1mod
U1 mode [0 = not used 1 = CO2 2 = ext. Set point 3 = temperature]
diSP TE
Display [TE = Temperature SP = Set Point]
OFF MJAM
Valve jam protection [OFF / ON]
OFF NIGHT
Night / day mode [OFF = Day ON = Night]
700 CO2LO
Lower limit P-band CO2 [400 ... 1000ppm]
1250 CO2HI
Upper limit P-band CO2 [500 ... 2000ppm]
---- INFO
Information
1.0.0 VERS
Version number

Commissioning

Modbus RTU 1st Version

Protocol selection in RCO-tool: **Modbus**.
The addressing of the registers in the application layer (RCO-tool) is equivalent to the physical addresses. Address range: 0 … 65535.

ERR 450 E:0:COM3 (Modbus)

Name:		Handshake:	None
Port:	COM3	Echo:	☐
Baudrate:	19200	Prompt:	☑
Data Bits:	8	Protocol:	☐
Parity:	Even	Multiserver:	☐
Stop Bits:	1		

Name	Slave Address	Point Address	Registers Count	Read Function	Write Function	Modbus Type	Info
E_Overd_PWM_3State	1	0	1	Read Coil Status	Write Single Coil	UINT16	OFF / ON
E_Overd_0_10V_Y3	1	1	1	Read Coil Status	Write Single Coil	UINT16	OFF / ON
E_Overd_VAV	1	2	1	Read Coil Status	Write Single Coil	UINT16	OFF / ON
E_Overd_Fan	1	3	1	Read Coil Status	Write Single Coil	UINT16	OFF / ON
E_Overd_A1	1	4	1	Read Coil Status	Write Single Coil	UINT16	OFF / ON
E_Overd_A1_Modbus	1	5	1	Read Coil Status	Write Single Coil	UINT16	OFF / ON
Service_Alarm_Reset	1	6	1	Read Coil Status	Write Single Coil	UINT16	OFF / ON
Heat_Cool_disabled	1	7	1	Read Coil Status	Write Single Coil	UINT16	OFF / ON
Night_Mode	1	8	1	Read Coil Status	Write Single Coil	UINT16	OFF / ON
Valve_Output	1	9	1	Read Coil Status	Write Single Coil	UINT16	0: direct / 1: inverse
Fan_simultan_Valve	1	10	1	Read Coil Status	Write Single Coil	UINT16	OFF / ON
Eff_SP_Night_Day	1	11	1	Read Coil Status	Write Single Coil	UINT16	0: user value / 1: Modbus value
Valve_Jam_Prev	1	12	1	Read Coil Status	Write Single Coil	UINT16	OFF / ON
Fan_Type	1	13	1	Read Coil Status	Write Single Coil	UINT16	0: 3-stages / 1: EC motor
Fan_St3_disabled	1	14	1	Read Coil Status	Write Single Coil	UINT16	OFF / ON
Eff_Fan_Night_Day	1	15	1	Read Coil Status	Write Single Coil	UINT16	0: user value / 1: Modbus value
Show_on_Display	1	16	1	Read Coil Status	Write Single Coil	UINT16	0: temperatrue / 1: set point
DI1_Oper_Direction	1	17	1	Read Coil Status	Write Single Coil	UINT16	0: NC / 1: NO
DI2_Oper_Direction	1	18	1	Read Coil Status	Write Single Coil	UINT16	0: NC / 1: NO
Valve_Oper_Direction	1	19	1	Read Coil Status	Write Single Coil	UINT16	0: NC / 1: NO
Summer_Mode	1	20	1	Read Coil Status	Write Single Coil	UINT16	0: winter / 1: summer
Occupied_by_PIR	1	0	1	Read Input Status	Off	UINT16	OFF / ON
Occupied_by_Button	1	1	1	Read Input Status	Off	UINT16	OFF / ON
Day_Extension	1	2	1	Read Input Status	Off	UINT16	OFF / ON
DI1_State	1	3	1	Read Input Status	Off	UINT16	OFF / ON
DI2_State	1	4	1	Read Input Status	Off	UINT16	OFF / ON
CO2_Overdrive	1	5	1	Read Input Status	Off	UINT16	OFF / ON
Temperature	1	3	1	Read Input Register	Off	SINT16	-600 ... 600 [-60.0 °C ... 60.0 °C]
Ext_Temp_Sensor	1	4	1	Read Input Register	Off	SINT16	-600 ... 600 [-60.0 °C ... 60.0 °C]
CO2	1	5	1	Read Input Register	Off	SINT16	0 ... 2000 ppm
Eff_Set_Point	1	6	1	Read Input Register	Off	SINT16	50 ... 500 [5.0 °C ... 50.0 °C]
Current_Valve	1	7	1	Read Input Register	Off	SINT16	0 ... 1000 [0.0 % ... 100.0 %]
Current_Fan	1	8	1	Read Input Register	Off	SINT16	0 ... 1000 [0.0 % ... 100.0 %]
Fan_Speed_Y2	1	9	1	Read Input Register	Off	SINT16	0 ... 1000 [0.0 % ... 100.0 %]
VAV_Y1	1	10	1	Read Input Register	Off	SINT16	0 ... 1000 [0.0 % ... 100.0 %]
Valve_Y3	1	11	1	Read Input Register	Off	SINT16	0 ... 1000 [0.0 % ... 100.0 %]
U1_Input_Value	1	12	1	Read Input Register	Off	SINT16	0 ... 1000 [0.0 V ... 10.0 V]
Ext_Tmp_Terminal	1	13	1	Read Input Register	Off	SINT16	-600 ... 600 [-60.0 °C ... 60.0 °C]
VAV_Control	1	14	1	Read Input Register	Off	SINT16	0: CO2 / 1: temperature / 2: PIR
Set_Point_User	1	15	1	Read Input Register	Off	SINT16	x ... y [x/10 °C ... y/10 °C]
Fan_Stage_User	1	16	1	Read Input Register	Off	SINT16	0 ... 4 [OFF, 1, 2, 3, Automatic]
SP_Deviation_User	1	17	1	Read Input Register	Off	SINT16	x ... y [x/10 °C ... y/10 °C]
Fan_Speed_Modbus	1	0	1	Read Multiple Register	Write Multiple Register	SINT16	0 ... 4 [OFF, 1, 2, 3, Automatic]
Set_Point_Modbus	1	1	1	Read Multiple Register	Write Multiple Register	SINT16	80 ... 500 [8.0 °C ... 50.0 °C]
Overd_Valve_PWM_Mod	1	2	1	Read Multiple Register	Write Multiple Register	SINT16	0 ... 1000 [0.0 % ... 100.0 %]

ERR 450 E:0:COM3 (Modbus)

Name:		Handshake:	None
Port:	COM3	Echo:	☐
Baudrate:	19200	Prompt:	☑
Data Bits:	8	Protocol:	☐
Parity:	Even	Multiserial:	☐
Stop Bits:	1		

Name	Slave Address	Point Address	Registers Count	Read Function	Write Function	Modbus Type	Info
Overd_Valve_0_10_Mod	1	3	1	Read Multiple Register	Write Multiple Register	SINT16	0 ... 1000 (0.0 % ... 100.0 %)
Overd_VAV_Mod	1	4	1	Read Multiple Register	Write Multiple Register	SINT16	0 ... 1000 (0.0 % ... 100.0 %)
Overd_Fan_Mod	1	5	1	Read Multiple Register	Write Multiple Register	SINT16	0 ... 1000 (0.0 % ... 100.0 %)
Ext_Tmp_DI2	1	6	1	Read Multiple Register	Write Multiple Register	SINT16	0 ... 7
Tmp_Sensor_Adjust	1	7	1	Read Multiple Register	Write Multiple Register	SINT16	-30 ... 30 (-3.0 K ... 3.0 K)
Center_User_SP	1	8	1	Read Multiple Register	Write Multiple Register	SINT16	180 ... 260 (18.0 °C ... 26.0 °C)
Limits_User_SP	1	9	1	Read Multiple Register	Write Multiple Register	SINT16	0 ... 160 (0.0 K ... 16.0 K)
Control	1	10	1	Read Multiple Register	Write Multiple Register	SINT16	0: P / 1: PI / 2: thermostat
P_Band	1	11	1	Read Multiple Register	Write Multiple Register	SINT16	10 ... 320 (1.0 °C ... 32.0 °C)
Integration_Time	1	12	1	Read Multiple Register	Write Multiple Register	SINT16	50 ... 5000 s
Fresh_Air_Control	1	13	1	Read Multiple Register	Write Multiple Register	SINT16	0: CO2/T / 1: Day/T / 2: CO2 / 3: Day
DI1_Mode	1	14	1	Read Multiple Register	Write Multiple Register	SINT16	0: not used / 1: day/night / 2: summer/winter
DI1_Delay_p_a	1	15	1	Read Multiple Register	Write Multiple Register	SINT16	0 ... 60 min
DI1_Delay_a_p	1	16	1	Read Multiple Register	Write Multiple Register	SINT16	0 ... 60 min
Temporary_Day_Mode	1	17	1	Read Multiple Register	Write Multiple Register	SINT16	1 ... 480 min
Min_VAV_Day	1	18	1	Read Multiple Register	Write Multiple Register	SINT16	0 ... 1000 (0.0 % ... 100.0 %)
U1_Mode	1	19	1	Read Multiple Register	Write Multiple Register	SINT16	0: not used / 1: CO2 / 2: set point / 3: temperature
Min_Valve	1	20	1	Read Multiple Register	Write Multiple Register	SINT16	0 ... 500 (0.0 % ... 50.0 %)
Max_Valve	1	21	1	Read Multiple Register	Write Multiple Register	SINT16	500 ... 1000 (50.0 % ... 100.0 %)
Min_Fan	1	22	1	Read Multiple Register	Write Multiple Register	SINT16	0 ... 500 (0.0 % ... 50.0 %)
Max_Fan	1	23	1	Read Multiple Register	Write Multiple Register	SINT16	500 ... 1000 (50.0 % ... 100.0 %)
Min_VAV	1	24	1	Read Multiple Register	Write Multiple Register	SINT16	0 ... 500 (0.0 % ... 50.0 %)
Max_VaV	1	25	1	Read Multiple Register	Write Multiple Register	SINT16	500 ... 1000 (50.0 % ... 100.0 %)
Scaling_Fan_Max	1	26	1	Read Multiple Register	Write Multiple Register	SINT16	0 ... 1000 (0.0 % ... 100.0 %)
Scaling_Fan_Min	1	27	1	Read Multiple Register	Write Multiple Register	SINT16	0 ... 1000 (0.0 % ... 100.0 %)
Fan_Usage	1	28	1	Read Multiple Register	Write Multiple Register	SINT16	OFF / ON
LL_P_Band_CO2	1	29	1	Read Multiple Register	Write Multiple Register	SINT16	400 ... 1000 ppm
UL_P_Band_CO2	1	30	1	Read Multiple Register	Write Multiple Register	SINT16	500 ... 2000 ppm
Floor_Tmp_Comp	1	32	1	Read Multiple Register	Write Multiple Register	SINT16	0 ... 20
Night_SP_Summer	1	33	1	Read Multiple Register	Write Multiple Register	SINT16	80 ... 300 (8.0 °C ... 30.0 °C)
Night_SP_Winter	1	34	1	Read Multiple Register	Write Multiple Register	SINT16	80 ... 300 (8.0 °C ... 30.0 °C)
Runtime_3St_Motor	1	35	1	Read Multiple Register	Write Multiple Register	SINT16	30 ... 300 s
Actuator	1	36	1	Read Multiple Register	Write Multiple Register	SINT16	0: 3-stage motor / 1: thermal actuator
Floor_Temp_Min	1	37	1	Read Multiple Register	Write Multiple Register	SINT16	80 ... 500 (8.0 °C ... 50.0 °C)
Floor_Temp_Max	1	38	1	Read Multiple Register	Write Multiple Register	SINT16	80 ... 500 (8.0 °C ... 50.0 °C)

Protocol selection in RCO-tool (available from version 2.2.0): **ModbusRTU** (available from firmware version 2.0.0).

The addressing of the registers in the application layer (RCO-tool) starts with address 1 (physical address + 1). Address range: 1 … 65536.

Discrete Inputs

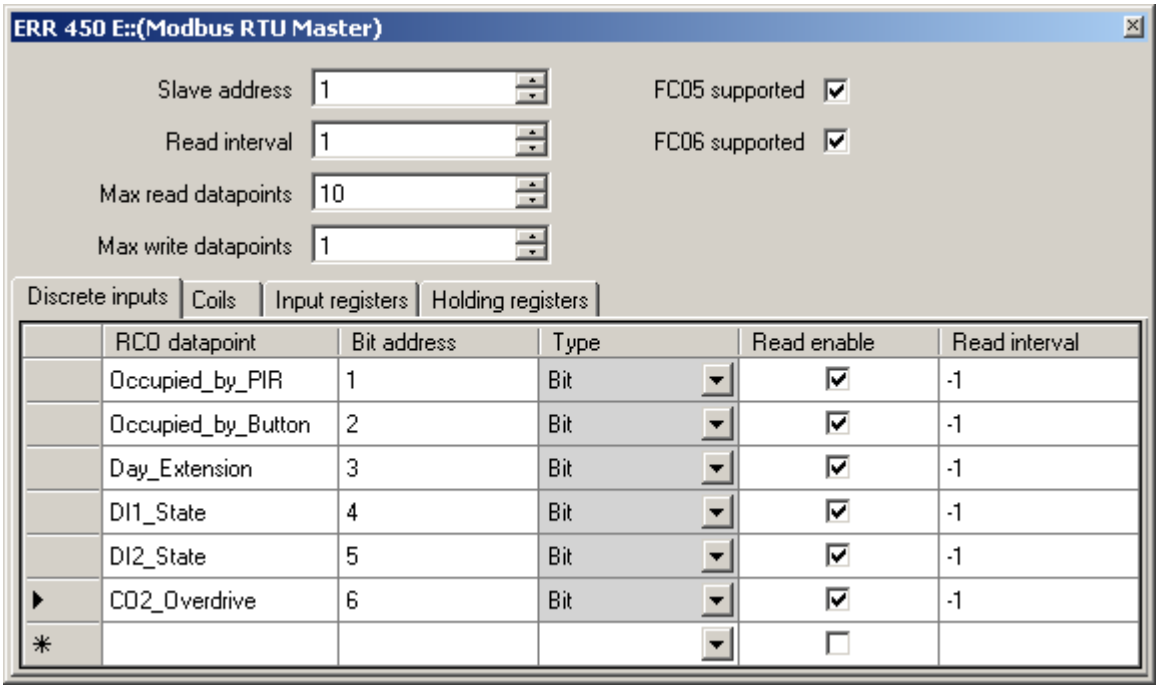

	RCO datapoint	Bit address	Type	Read enable	Read interval
	Occupied_by_PIR	1	Bit	☑	-1
	Occupied_by_Button	2	Bit	☑	-1
	Day_Extension	3	Bit	☑	-1
	DI1_State	4	Bit	☑	-1
	DI2_State	5	Bit	☑	-1
▶	CO2_Overdrive	6	Bit	☑	-1
*				☐	

Coils

ERR 450 E::(Modbus RTU Master)

Slave address: 1

Read interval: 1

Max read datapoints: 10

Max write datapoints: 1

FC05 supported ☑

FC06 supported ☑

Discrete inputs | Coils | Input registers | Holding registers

	RCO datapoint	Bit address	Type	Read enable	Read interval	Write enable	Write interval
	Enable_Overdrive_PWM_3_State	1	Bit	☑	-1	☑	0
	Enable_Overdrive_0_10V_Y3	2	Bit	☑	-1	☑	0
	Enable_Overdrive_VAV	3	Bit	☑	-1	☑	0
	Enable_Overdrive_Fan	4	Bit	☑	-1	☑	0
	Enable_Overdrive_A1	5	Bit	☑	-1	☑	0
	Enable_Overdrive_A1_Modbus	6	Bit	☑	-1	☑	0
	Service_Alarm_Reset	7	Bit	☑	-1	☑	0
	Heating_Cooling_disabled	8	Bit	☑	-1	☑	0
	Night_Mode	9	Bit	☑	-1	☑	0
	Valve_Output	10	Bit	☑	-1	☑	0
	Fan_simultaneously_with_Valve	11	Bit	☑	-1	☑	0
	Eff_Set_Point_Night_to_Day	12	Bit	☑	-1	☑	0
	Valve_Jam_Prevention	13	Bit	☑	-1	☑	0
	Fan_Type	14	Bit	☑	-1	☑	0
	Fan_Stage_3_disabled	15	Bit	☑	-1	☑	0
	Eff_Fan_Stage_Night_to_Day	16	Bit	☑	-1	☑	0
	Show_on_Display	17	Bit	☑	-1	☑	0
	DI1_Operation_Direction	18	Bit	☑	-1	☑	0
	DI2_Operation_Direction	19	Bit	☑	-1	☑	0
	Valve_Operation_Direction	20	Bit	☑	-1	☑	0
	Summer_Mode	21	Bit	☑	-1	☑	0

Input Register

ERR 450 E::(Modbus RTU Master)

Slave address: 1
Read interval: 1
Max read datapoints: 10
Max write datapoints: 1
FC05 supported: ☑
FC06 supported: ☑

Discrete inputs | Coils | Input registers | Holding registers

	RCO datapoint	Start register	Type	Little endian byte ordering	Little endian word ordering	Read enable	Read interval
	Temperature	4	Sint-16	☐	☐	☑	-1
	Ext_Temperature_Sensor	5	Sint-16	☐	☐	☑	-1
	CO2	6	Sint-16	☐	☐	☑	-1
	Eff_Set_Point	7	Sint-16	☐	☐	☑	-1
	Current_Valve	8	Sint-16	☐	☐	☑	-1
	Current_Fan	9	Sint-16	☐	☐	☑	-1
	Fan_Speed_Y2	10	Sint-16	☐	☐	☑	-1
	VAV_Y1	11	Sint-16	☐	☐	☑	-1
	Valve_Y3	12	Sint-16	☐	☐	☑	-1
	U1_Input_Value	13	Sint-16	☐	☐	☑	-1
	Ext_Temperature_Terminal	14	Sint-16	☐	☐	☑	-1
	VAV_Control	15	Sint-16	☐	☐	☑	-1
	Set_Point_User	16	Sint-16	☐	☐	☑	-1
	Fan_Stage_User	17	Sint-16	☐	☐	☑	-1
	Set_Point_Deviaton_User	18	Sint-16	☐	☐	☑	-1

Holding Register

ERR 450 E::(Modbus RTU Master)

Slave address: 1
Read interval: 1
Max read datapoints: 10
Max write datapoints: 1
FC05 supported ☑
FC06 supported ☑

Discrete inputs | Coils | Input registers | Holding registers

RCO datapoint	Start register	Type	Little endian byte ordering	Little endian word ordering	Read enable	Read interval	Write enable	Write interval
Fan_Speed_Modbus	1	Sint-16	☐	☐	☑	-1	☑	0
Set_Point_Modbus	2	Sint-16	☐	☐	☑	-1	☑	0
Overdrive_Valve_PWM_Modbus_A2	3	Sint-16	☐	☐	☑	-1	☑	0
Overdrive_Valve_0_10V_Modbus_Y3	4	Sint-16	☐	☐	☑	-1	☑	0
Overdrive_VAV_Modbus_Y1	5	Sint-16	☐	☐	☑	-1	☑	0
Overdrive_Fan_Modbus_Y2	6	Sint-16	☐	☐	☑	-1	☑	0
Ext_Temperature_DI2	7	Sint-16	☐	☐	☑	-1	☑	0
Temperature_Sensor_Adjustment	8	Sint-16	☐	☐	☑	-1	☑	0
Center_User_Set_Point	9	Sint-16	☐	☐	☑	-1	☑	0
Limits_User_Set_Point	10	Sint-16	☐	☐	☑	-1	☑	0
Control	11	Sint-16	☐	☐	☑	-1	☑	0
Proportional_Band	12	Sint-16	☐	☐	☑	-1	☑	0
Integration_Time	13	Sint-16	☐	☐	☑	-1	☑	0
Fresh_Air_Control	14	Sint-16	☐	☐	☑	-1	☑	0
DI1_Mode	15	Sint-16	☐	☐	☑	-1	☑	0
DI1_Delay_passive_active	16	Sint-16	☐	☐	☑	-1	☑	0
DI1_Delay_active_passive	17	Sint-16	☐	☐	☑	-1	☑	0
Duration_Temporary_Day_Mode	18	Sint-16	☐	☐	☑	-1	☑	0
Min_VAV_Day_Mode	19	Sint-16	☐	☐	☑	-1	☑	0
U1_Mode	20	Sint-16	☐	☐	☑	-1	☑	0
Min_Valve	21	Sint-16	☐	☐	☑	-1	☑	0
Max_Valve	22	Sint-16	☐	☐	☑	-1	☑	0
Min_Fan	23	Sint-16	☐	☐	☑	-1	☑	0
Max_Fan	24	Sint-16	☐	☐	☑	-1	☑	0
Min_VAV	25	Sint-16	☐	☐	☑	-1	☑	0
Max_VAV	26	Sint-16	☐	☐	☑	-1	☑	0
Scaling_Fan_Max	27	Sint-16	☐	☐	☑	-1	☑	0
Scaling_Fan_Min	28	Sint-16	☐	☐	☑	-1	☑	0
Fan_Usage	29	Sint-16	☐	☐	☑	-1	☑	0
Lower_Limit_P_Band_CO2	30	Sint-16	☐	☐	☑	-1	☑	0
Upper_Limit_P_Band_CO2	31	Sint-16	☐	☐	☑	-1	☑	0
Floor_Temperature_Compensation_Factor	33	Sint-16	☐	☐	☑	-1	☑	0
Night_Set_Point_Summer	34	Sint-16	☐	☐	☑	-1	☑	0
Night_Set_Point_Winter	35	Sint-16	☐	☐	☑	-1	☑	0
Runtime_3_Stage_Motor	36	Sint-16	☐	☐	☑	-1	☑	0
Actuator	37	Sint-16	☐	☐	☑	-1	☑	0
Floor_Temperature_Min	38	Sint-16	☐	☐	☑	-1	☑	0
Floor_Temperature_Max	39	Sint-16	☐	☐	☑	-1	☑	0

Control Methods

Winter mode (heating)

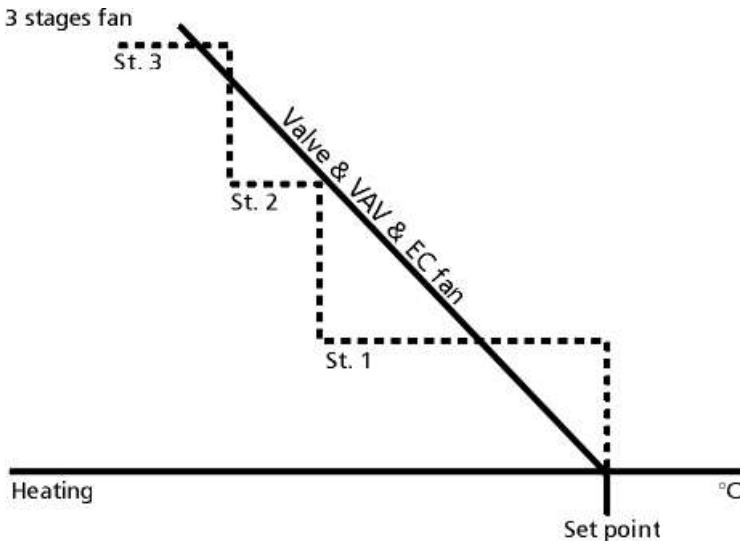

Summer mode (cooling)

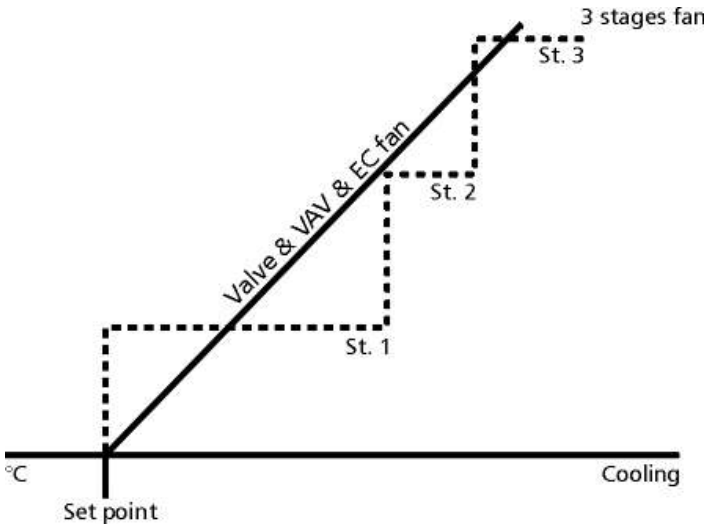

Valve opens before the fan speed increases (figure: winter mode)

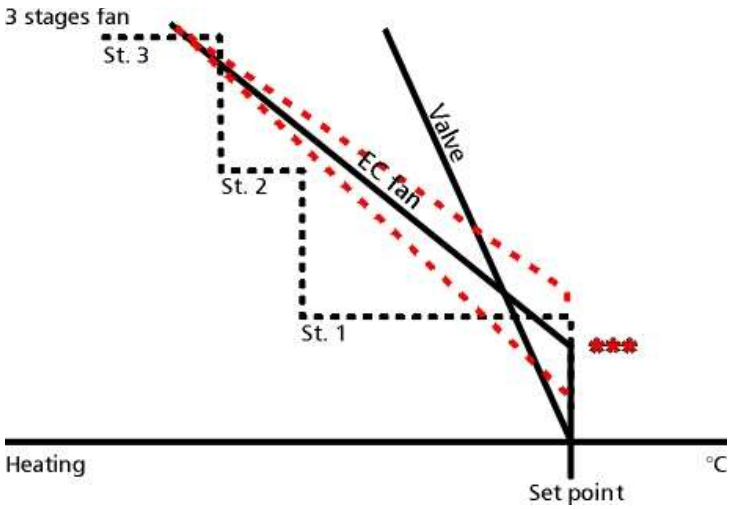

Parameters	Modbus Address (Modbus RTU)	Setting
Fan simultaneously with valve	10 (11) Coil	0 (off)
Fan output scaling lower limit ***	27 (28) Holding Register	20% (example ***)

Set point night mode (figure: winter mode)

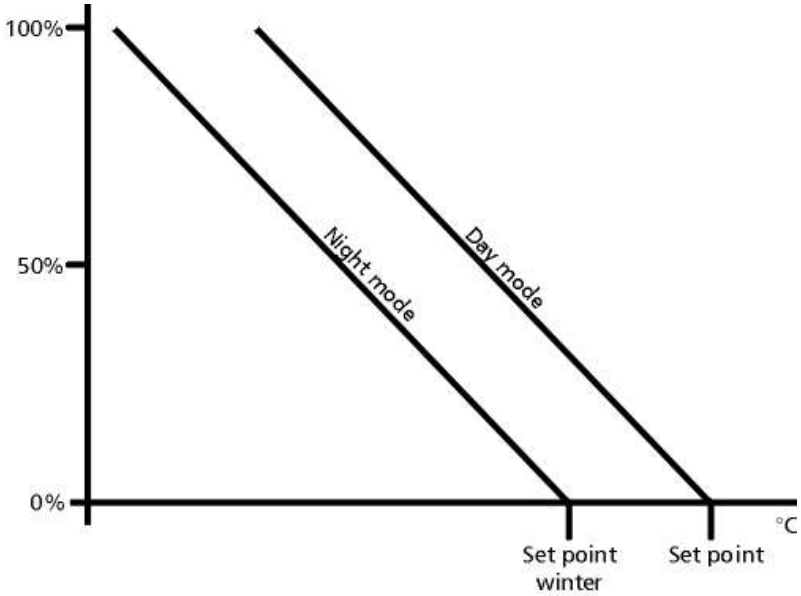

Parameters	Modbus Address (Modbus RTU)	Setting
Center user set point °C	8 (9) Holding Register	e.g. 23 °C
Night set point winter mode	34 (35) Holding Register	e.g. 18 °C

Applications

Heating and cooling with 2-pipe fan coil unit

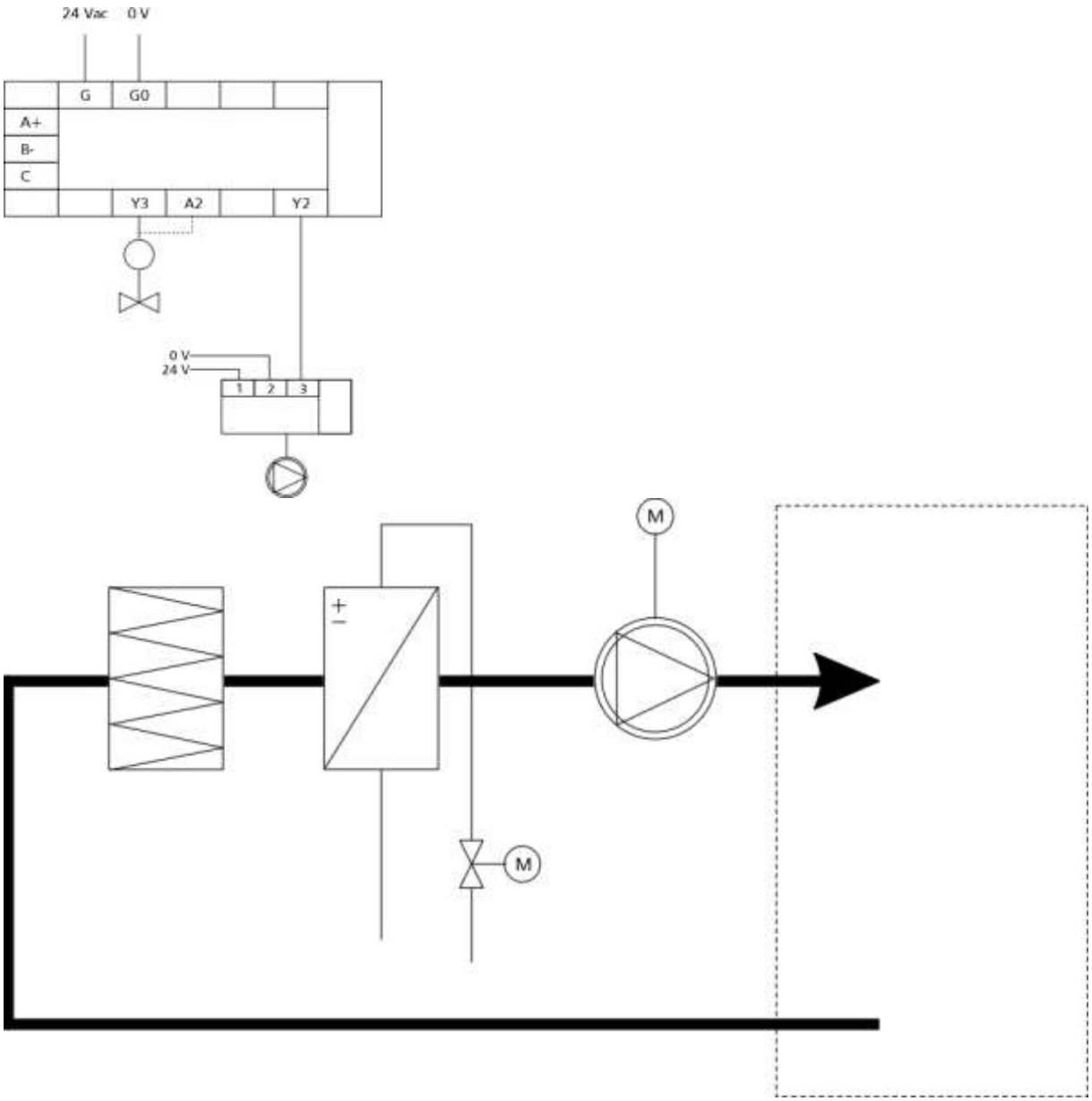

Parameters	Modbus Address (Modbus RTU)	Setting
Valve jam protection	12 (13) Coil	0 (off)
Minimum value fan	23 (24) Holding Register	100 %
Fan output scaling upper limit	26 (27) Holding Register	100 %
Fan output scaling lower limit	27 (28) Holding Register	0 %
Fan usage	28 (29) Holding Register	0 (off)
Fan type	13 (14) Coil	0 (3-stages)
Fan stage 3 disabled	14 (15) Coil	on (stage 3 disabled)

Fan Control

A 3-stage or 0 ... 10VDC (EC motor) fan can be used. If the fan is controlled manually the stages represent following speeds:
0 = 0%, 1 = 33%, 2 = 66%, 3 = 100%.

If a relay module is connected to Y2 the speed of a fan coil or 3-stages fan can be controlled. For example, if the parameter "Fan Usage" = 1 (On) and the parameter "Fan Type" = 1 (EC fan), the fan works like this:

- If the temperature reaches the set point, the valve closes and the fan stops after 5 minutes.
- If the temperature goes below the set point, the valve starts to open and the fan is controlled to stage 1 (Y2 = 33%).
- If the temperature continues to decrease, the valve opens over 70% and the fan is controlled to stage 2 (Y2 = 66%).
- If the temperature still continues to decrease, the valve opens over 90% and the fan is controlled to stage 3 (Y2 = 100%).

Floor heating and cooling, fan on demand (CO_2)

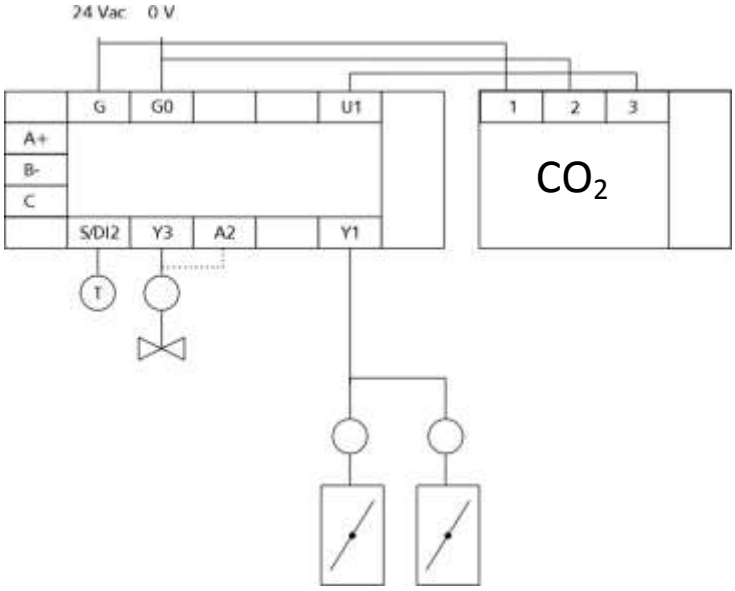

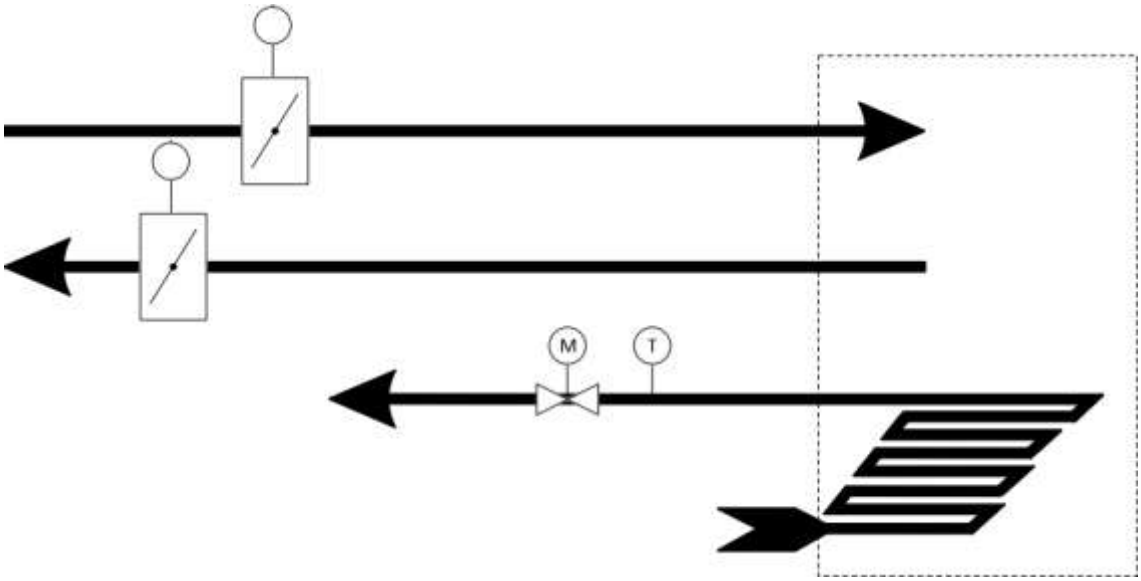

Parameters	Modbus Address (Modbus RTU)	Setting
Ext. temperature sensor	6 (7) Holding Register	0 (not connected)
U1 mode	19 (20) Holding Register	0 (not used)
Minimum VAV	24 (25) Holding Register	0 %
Lower limit P-band for CO_2 control	29 (30) Holding Register	700 ppm
Upper limit P-band for CO_2 control	30 (31) Holding Register	1250 ppm
Fresh air control	13 (14) Holding Register	0 (CO_2/T)
Min. VAV in day mode	18 (19) Holding Register	0 %
Min. temperature return water	37 (38) Holding Register	23 °C
Max. temperature return water	38 (39) Holding Register	35 °C
Floor temperature compensation factor	32 (33) Holding Register	1

CO_2 concentration based fresh air usage requires following parameters:

Fresh air control: 0 (CO_2/T) or 2 (CO_2)

Universal input 1: 1 (CO_2 measurement)

The CO_2 transmitter has to be connected to universal input 1.

Fresh air control in day mode:

Fresh air control: 1 (Day/T) or 3 (Day)

Day mode control: PIR, Modbus or "Man In House" key.

Min. VAV in day mode has to be > 0 (e.g. 80 %).

Heating and cooling with beam, fan on demand (CO_2)

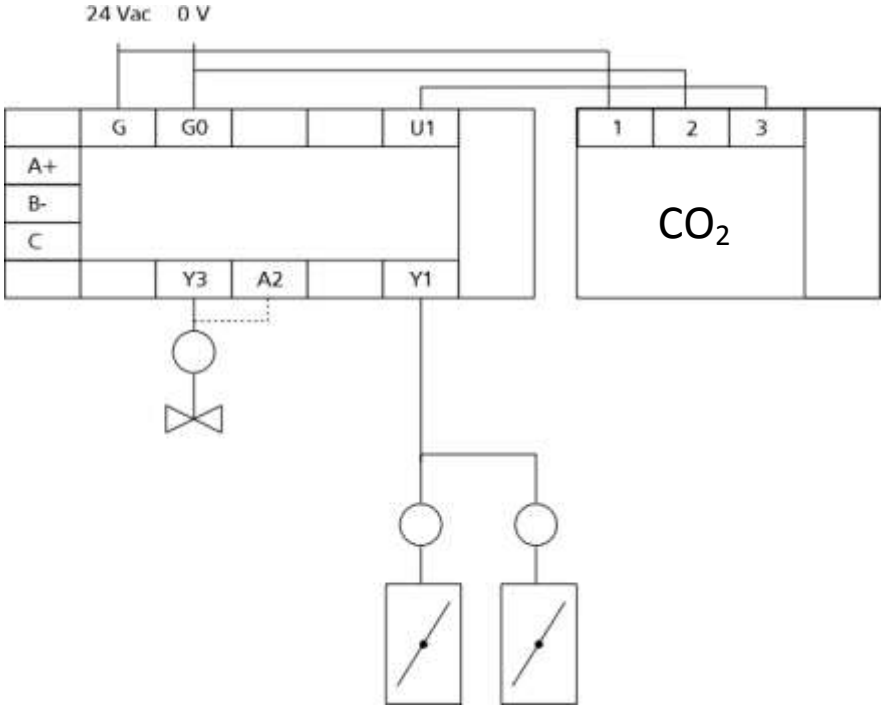

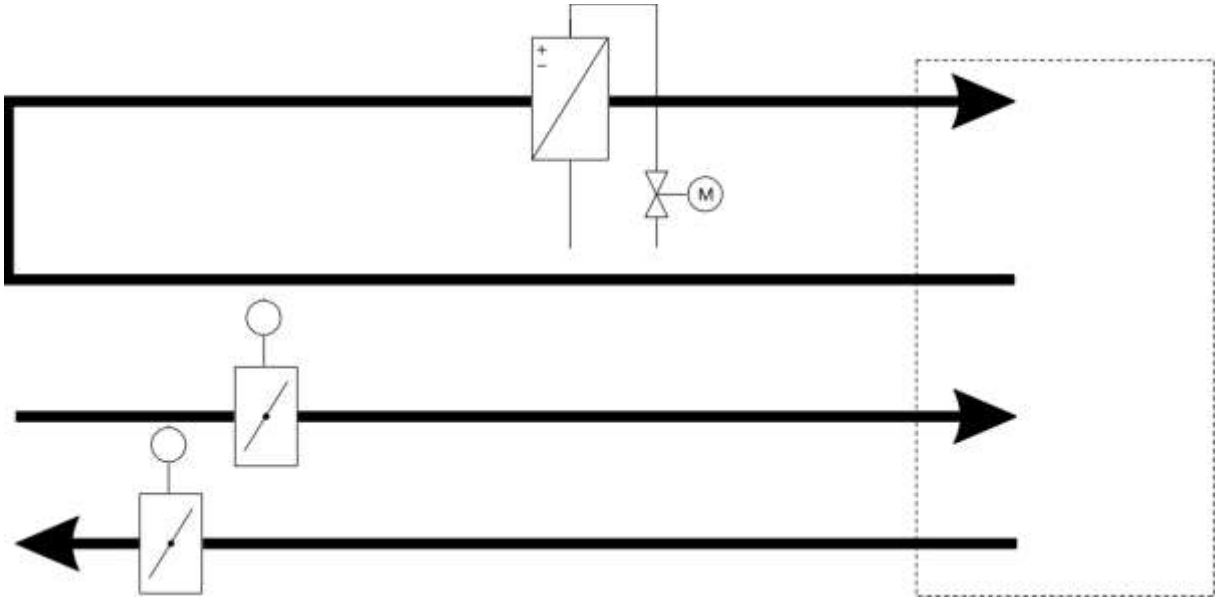

Parameters	Modbus Address (Modbus RTU)	Setting
Valve jam protection	12 (13) Coil	0 (off)
Minimum value VAV	24 (25) Holding Register	0 (%)

If CO_2 measurement or PIR (presence detection) is used:

Parameters	Modbus Address (Modbus RTU)	Setting
Universal input 1	19 (20) Holding Register	1 (CO_2 measurement)
Lower limit P-band for CO_2	29 (30) Holding Register	700 (ppm)
Upper limit P-band for CO_2	30 (31) Holding Register	1250 (ppm)
Fresh air control	13 (14) Holding Register	0 (CO_2/T)
Minimum value VAV day	18 (19) Holding Register	0 (%)

Supply air heating with min / max limitation, fan on demand (CO_2)

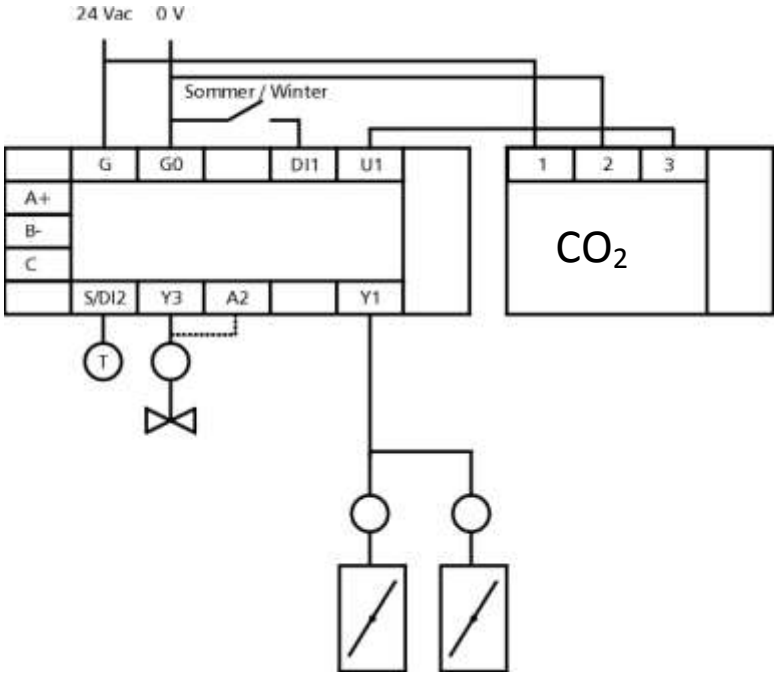

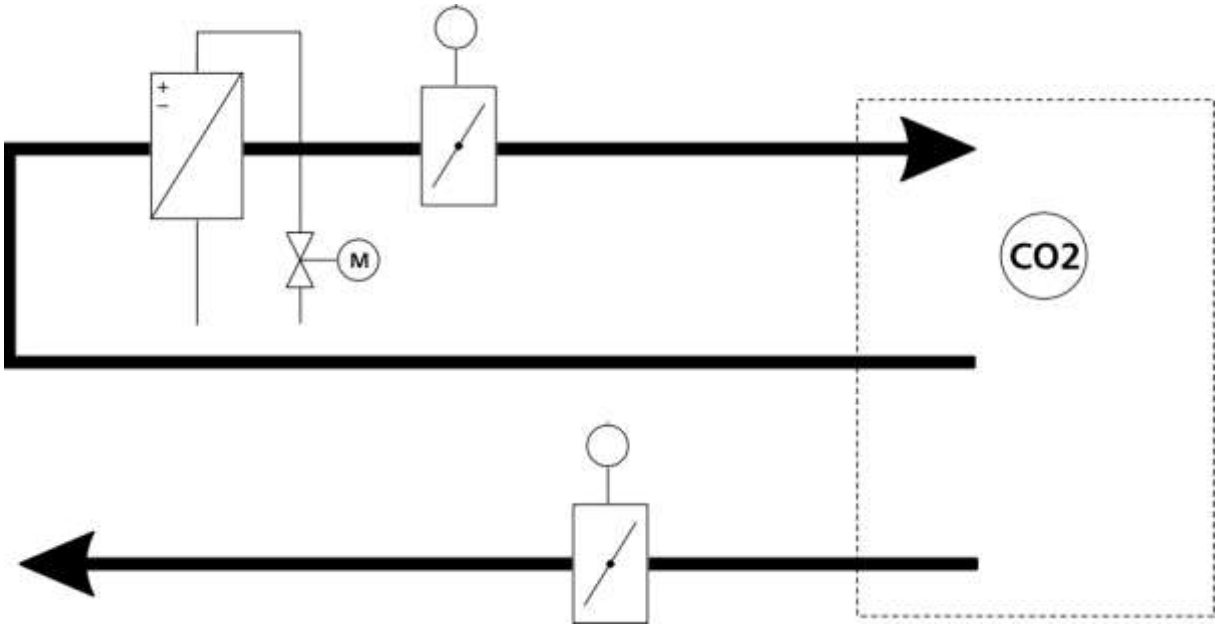

Parameters	Modbus Address (Modbus RTU)	Setting
External temperature sensor	6 (7) Holding Register	0 (not used)
Fresh air control	13 (14) Holding Register	0 (CO_2/T)
Digital input 1	14 (15) Holding Register	0 (not used)
Digital input 1 operation direction	17 (18) Coil	0 (NC)
DI1 delay passive -> active	15 (16) Holding Register	0 (Min)
DI1 delay active -> passive	16 (17) Holding Register	5 (Min)
Universal input 1	19 (20) Holding Register	0 (not used)
Lower limit P-band for CO_2	29 (30) Holding Register	700 (ppm)
Upper limit P-band for CO_2	30 (31) Holding Register	1250 (ppm)
Min. temperature return water	37 (38) Holding Register	23 °C
Max. temperature return water	38 (39) Holding Register	35 °C

Changing the floor temperature set point in user mode

The floor temperature set point can be changed in user mode if the parameter "External temperature sensor" is set to 4, 5 or 6 (minimum limit, maximum limit or minimum and maximum limit).

- Press the "Man In House" key for minimum 5 seconds.
- The floor temperature is displayed for 3 seconds then the set point is displayed.
- Change the set point using the **+** and **-** keys.

Parameter	Modbus Address (Modbus RTU)	Setting
External temperature sensor	6 (7) Holding Register	6 (Min. and Max.)
Min. temperature return water	37 (38) Holding Register	23 °C
Max. temperature return water	38 (39) Holding Register	35 °C

Thermostat mode

To control the outputs in thermostat mode, the parameter "Control" has to be 2 (Thermostat).

In the night mode the controller works according to the chosen function – thermostat mode or night set point mode.

The thermostat mode affects the outputs A1, A2, B2 and Y3.

Actuator function in winter mode

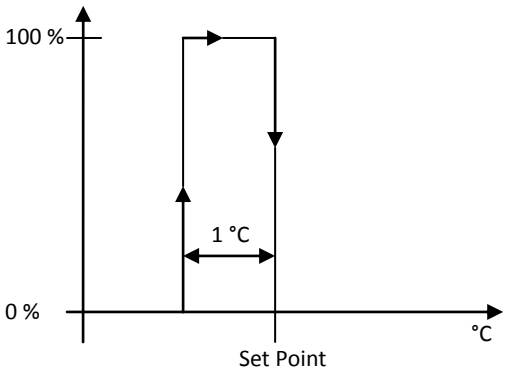

Actuator function in summer mode

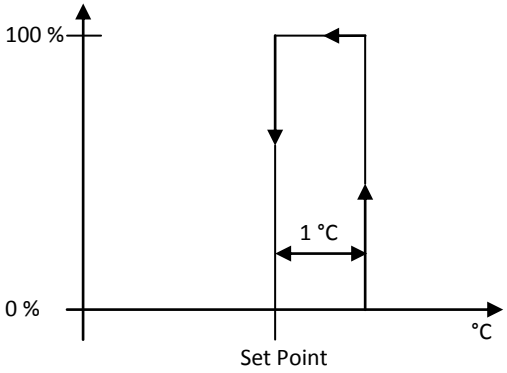

Parameter	Modbus Address (Modbus RTU)	Setting
Center user set point	8 (9) Holding Register	21 °C
Limits user set point	9 (10) Holding Register	+/-3 °C
Control	10 (11) Holding Register	2 (Thermostat)

Control of the day and night mode

- If the parameter "Night mode" = Off, the controller is fixed to day mode.

- Parameter "Night mode" = On: The controller changes to day mode as soon as the first parameter requests the day mode and it changes to night mode when the last parameter stops the request for day mode.

Example:

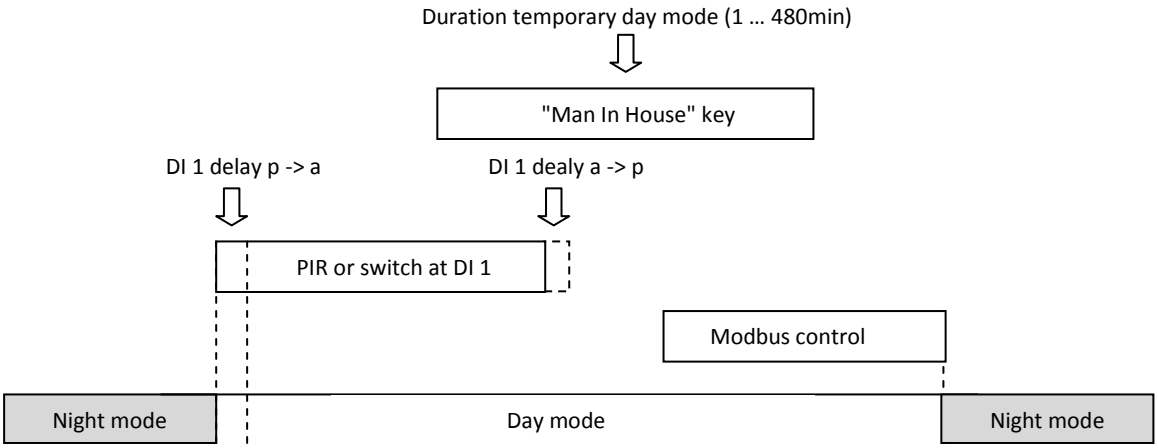

Parameter	Modbus Address (Modbus RTU)	Setting
External temperature sensor	6 (7) Holding Register	0 (not used)
DI2 operation direction	18 (19) Coil	1 (NO)
DI1 mode	14 (15) Holding Register	0 (not used)
DI1 operation direction	17 (18) Coil	0 (NC)
DI1 delay passive -> active	15 (16) Holding Register	0 (0 minutes)
DI1 delay active -> passive	16 (17) Holding Register	5 (5 minutes)
Duration temporary day mode	17 (18) Holding Register	120 (120 minutes)
Min. VAV in day mode	18 (19) Holding Register	0 (0 %)
Eff. set point night -> day	11 (12) Coil	Off (user value)
Night mode	8 (9) Coil	Off (day mode)

Change of the controller to day mode

- Improvement of the fresh air usage (Parameter "Min. VAV in day mode" defines the improvement (0 … 100%)). The value 0% disables the fresh air improvement.
- The temperature set point defined in "Effective set point night -> day mode" is used.
- The dead zone for the day mode is used and the controller changes from a possible frost guard mode to the control mode.

Temperature set point

The temperature set point can be one of the following:

- Set with the controller keys (see parameters "Center user set point" and "Limits user set point").
- External temperature set point (Universal input 1 0 ... 10 VDC). Parameter "U1 mode" has to be 2.
- Set point via Modbus.
- Set point night in winter mode.

The change from night mode to day mode affects also the temperature set point. The parameter "Effective set point night -> day" defines whether the latest user defined set point or the Modbus set point should be used. The user set point can be the set point from the universal input 1 (0 ... 10 VDC) or the set point defined with the controller keys.

Parameter	Modbus Address (Modbus RTU)	Setting
Center user set point	8 (9) Holding Register	21 (°C)
Limits user set point	9 (10) Holding Register	+/- 3 (°C)
Night set point summer mode	33 (34) Holding Register	25 (°C)
Night set point winter mode	34 (35) Holding Register	18 (°C)
Effective set point night -> day	11 (12) Coil	0 (user value)
U1 mode	19 (20) Holding Register	0 (not used)
Display	16 (17) Coil	0 (temperature)

If the parameter "Center user set point" is changed via Modbus the value "Set point deviation user" is kept unchanged.

Example:

- The center user set point is 21 °C and the user has changed the value to 23 °C (Set point deviation user = +2 °C).
- The center user set point is changed via Modbus to 22 °C (Holding Register 11).
- The controller uses 24 °C as effective set point (22 °C + 2°C).

Examples:

The set point should be kept on a constant value of 21 °C when the controller changes from night to day mode.

Parameter	Modbus Address (Modbus RTU)	Setting
Effective set point night -> day	11 (12) Coil	1 (Modbus value)
Set point Modbus	1 (2) Holding Register	21 (°C)

The set point should be set to the latest value set by the user when the controller changes from night to day mode.

Parameter	Modbus Address (Modbus RTU)	Setting
Effective set point night -> day	11 (12) Coil	0 (user value)

The set point should be kept on the value set by Modbus.

Parameter	Modbus Address (Modbus RTU)	Setting
Center user set point	8 (9) Holding Register	21 (°C)
Limits user set point	9 (10) Holding Register	+/- 0 (°C)

Modbus Registers

Coils

Register	Description	Data type	Value	Default
0 (1)	Enable overdrive PWM/tristate	Bit	OFF/ON	OFF
1 (2)	Enable overdrive 0-10V (Y3)	Bit	OFF/ON	OFF
2 (3)	Enable overdrive VAV	Bit	OFF/ON	OFF
3 (4)	Enable overdrive fan	Bit	OFF/ON	OFF
4 (5)	Enable overdrive A1	Bit	OFF/ON	OFF
5 (6)	Enable overdrive A1 by Modbus	Bit	OFF/ON	OFF
6 (7)	Service alarm reset	Bit	OFF/ON	OFF
7 (8)	Heating / cooling disabled	Bit	OFF/ON	OFF
8 (9)	Night mode	Bit	OFF/ON	OFF
9 (10)	Valve output (0: direct, 1: inverse)	Bit	OFF/ON	direct
10 (11)	Fan simultaneously with valve	Bit	OFF/ON	ON
11 (12)	Effective set point after night to day mode change (0: user value, 1: Modbus value)	Bit	OFF/ON	user value
12 (13)	Valve jam prevention	Bit	OFF/ON	OFF
13 (14)	Fan type (0: 3-stages, 1: EC-motor)	Bit	OFF/ON	3-stages
14 (15)	Fan stage 3 disabled	Bit	OFF/ON	OFF
15 (16)	Effective fan stage after night to day mode change (0: user value, 1: Modbus value)	Bit	OFF/ON	user value
16 (17)	Display (0: temperature, 1: set point)	Bit	OFF/ON	temperature
17 (18)	DI1 operation direction (0: NC, 1: NO)	Bit	OFF/ON	NC
18 (19)	DI2 operation direction (0: NC, 1: NO)	Bit	OFF/ON	NC
19 (20)	Valve operation direction (0: NC, 1: NO)	Bit	OFF/ON	NC
20 (21)	Summer mode (0: winter, 1: summer)	Bit	OFF/ON	winter

Discrete Inputs

Register	Description	Data type	Value	Default
0 (1)	Occupied by PIR	Bit	OFF/ON	
1 (2)	Occupied by "Man In House" symbol	Bit	OFF/ON	
2 (3)	Day extension	Bit	OFF/ON	
3 (4)	DI1 state	Bit	OFF/ON	
4 (5)	DI2 state	Bit	OFF/ON	
5 (6)	CO_2 override	Bit	OFF/ON	

Input Registers

Register	Description	Data type	Value	Meaning
0 (1)	---	UINT16	16 Bits	
1 (2)	---	UINT16	16 Bits	
2 (3)	---	UINT16	16 Bits	
3 (4)	Temperature °C	SINT16	-600 … 600	-60.0 … 60.0
4 (5)	External temperature sensor °C	SINT16	-600 … 600	-60.0 … 60.0
5 (6)	CO_2 ppm	SINT16	0 … 2000	0 … 2000
6 (7)	Effective set point °C	SINT16	50 … 500	5.0 … 50.0
7 (8)	Current valve %	SINT16	0 … 1000	0.0 … 100.0
8 (9)	Current fan speed %	SINT16	0 … 1000	0.0 … 100.0
9 (10)	Fan speed (Y2) %	SINT16	0 … 1000	0.0 … 100.0
10 (11)	VAV (Y1) %	SINT16	0 … 1000	0.0 … 100.0
11 (12)	Valve (Y3) %	SINT16	0 … 1000	0.0 … 100.0
12 (13)	U1 input value V	SINT16	0 … 1000	0.0 … 10.00
13 (14)	External temperature sensor (connector) °C	SINT16	-600 … 600	-60.0 … 60.0
14 (15)	VAV control (0: CO_2, 1: Tmp, 2: PIR)	SINT16	0 … 2	0 … 2
15 (16)	Set point user °C	SINT16	x … y	x/10 … y/10
16 (17)	Fan stage user	SINT16	0 … 4	Off, 1, 2, 3, Automatic
17 (18)	Set point deviation user °C	SINT16	x … y	x/10 … y/10

Holding Registers

Register	Description	Data type	Value	Meaning	Default
0 (1)	Fan speed Modbus	SINT16	0 … 4	Off, 1, 2, 3, Automatic	0
1 (2)	Set point Modbus °C	SINT16	80 … 500	8.0 … 50.0	210
2 (3)	Override valve PWM Modbus (A2) %	SINT16	0 … 1000	0.00 … 100.0	0
3 (4)	Override valve 0 - 10V Modbus (Y3) %	SINT16	0 … 1000	0.00 … 100.0	0
4 (5)	Override VAV Modbus (Y1) %	SINT16	0 … 1000	0.00 … 100.0	0
5 (6)	Override fan Modbus (Y2) %	SINT16	0 … 1000	0.00 … 100.0	0
6 (7)	External temperature sensor / DI2 input (0: not used, 1: ext. tmp., 2: door/window contact, 3: condensation switch, 4: floor temp. min, 5: floor temp. max, 6: min and max values, 7: summer/winter switch)	SINT16	0 … 7	0 … 7	0
7 (8)	Temp. sensor adjustment °C	SINT16	-30 … 30	-3.0 … 3.0	0
8 (9)	Center user set point °C	SINT16	180 … 260	18.0 … 26.0	210
9 (10)	Limits user set point °C	SINT16	0 … 160	0.0 … 16.0	30
10 (11)	Control	SINT16	0 … 2	P – PI - Th	1
11(12)	Proportional band °C	SINT16	10 … 320	1.0 … 32.0	10
12 (13)	Integration time s	SINT16	50 … 5000	50 … 5000	300
13 (14)	Fresh air control (0: CO_2/T, 1: Day/T, 2: CO_2, 3: Day)	SINT16	0 … 3	0 … 3	0
14 (15)	DI1 mode (0: not used, 1: day/night change, 2: summer/winter switch)	SINT16	0 … 2	0 … 2	0
15 (16)	DI1 delay passive -> active min	SINT16	0 … 60	0 … 60	0
16 (17)	DI1 delay active -> passive min	SINT16	0 … 60	0 … 60	5
17 (18)	Duration temporary day mode min	SINT16	1 … 480	1 … 480	120
18 (19)	Min. VAV in day mode %	SINT16	0 … 1000	0 … 100	0
19 (20)	U1 mode (0: not used, 1: CO_2, 2: set point, 3: temperature)	SINT16	0 … 3	0 … 3	0
20 (21)	Minimum valve %	SINT16	0 … 500	0 … 50	0
21 (22)	Maximum valve %	SINT16	500 … 1000	50 … 100	1000

Register	Description	Data type	Value	Meaning	Default
22 (23)	Minimum fan %	SINT16	0 … 500	0 … 50	0
23 (24)	Maximum fan %	SINT16	500 … 1000	50 … 100	1000
24 (25)	Minimum VAV %	SINT16	0 … 500	0 … 50	0
25 (26	Maximum VAV %	SINT16	500 … 1000	50 … 100	1000
26 (27)	Scaling fan max %	SINT16	0 … 1000	0 … 100	1000
27 (28)	Scaling fan min %	SINT16	0 … 1000	0 … 100	0
28 (29)	Fan usage (0: off, 1:on)	SINT16	0 … 1	0 … 1	0
29 (30)	Lower limit P-band for CO_2 control ppm	SINT16	400 … 1000	400 … 1000	700
30 (31)	Upper limit P-band for CO_2 control ppm	SINT16	500 … 2000	500 … 2000	1250
31 (32)	---	SINT16	0 … 4	0 … 4	0
32 (33)	Floor temperature compensation	SINT16	0 … 20	0 … 20	1
33 (34)	Night set point summer mode	SINT16	80 … 300	8.0 … 30.0	250
34 (35)	Night set point winter mode	SINT16	80 … 300	8.0 … 30.0	180
35 (36)	Running time 3-stage motor (sec)	SINT16	30 … 300	30 … 300	180
36 (37)	Actuator (0: 3-stage motor, 1: thermal actuator)	SINT16	0 … 1	0 … 1	0
37 (38)	Floor temperature min	SINT16	80 … 500	8.0 … 50.0	230
38 (39)	Floor temperature max	SINT16	80 … 500	8.0 … 50.0	350