ELESTA
building automation

Room Control Units
FBR916A02
FWH916A02

ELESTA
building automation

Room Control Unit without humidity sensor [with humidity sensor]

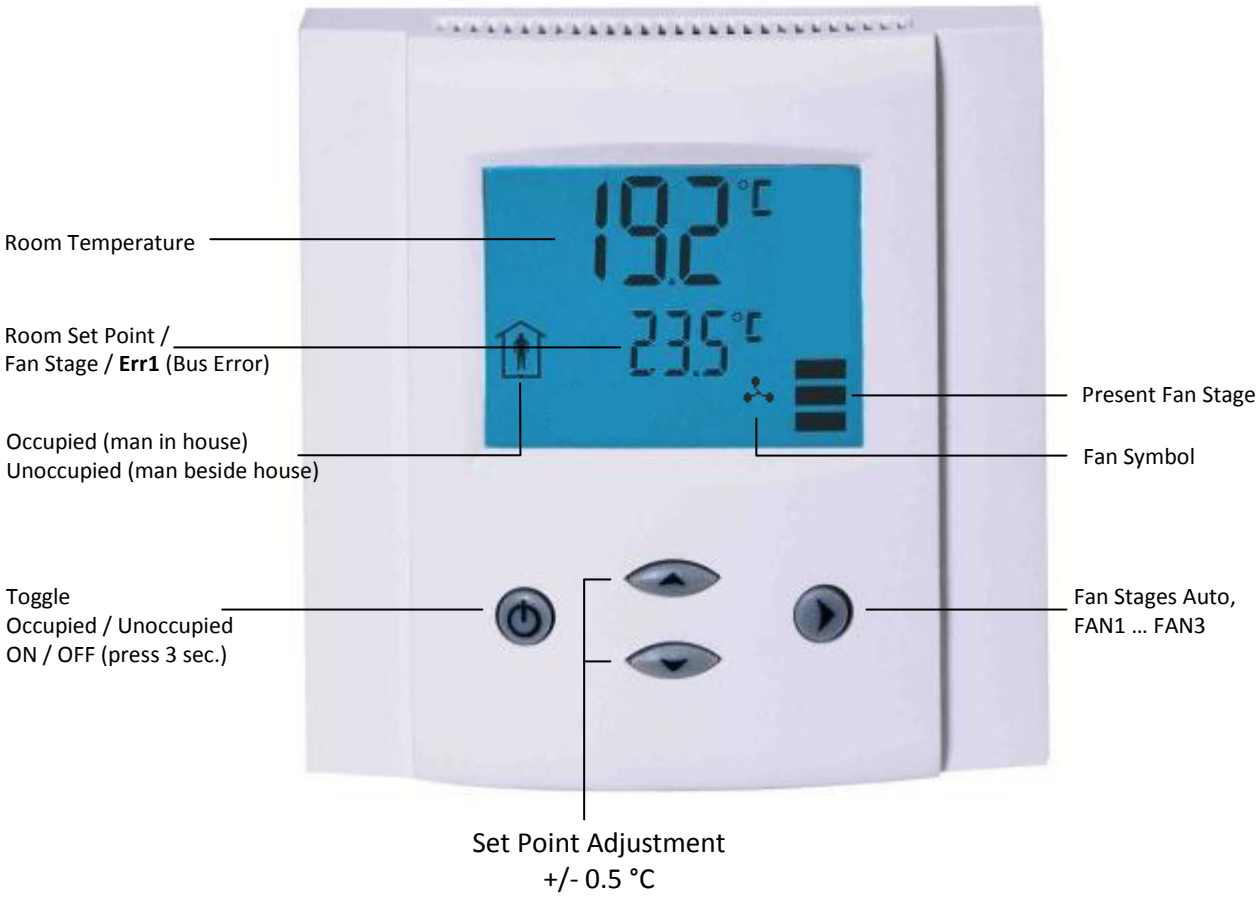

Connection Scheme

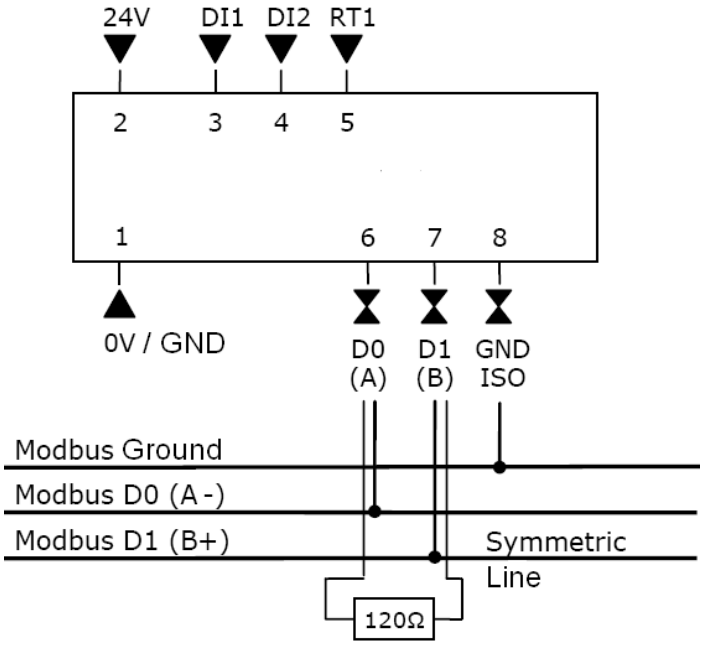

Line termination resistor on last unit on the bus only

Version 1-0-0
14.01.14
Data are subject to change without notice

ELESTA
building automation

Modbus RTU:

Baud Rate:	19.200 bps
Data Bits:	8
Parity:	Even
Stop Bits:	1

Registers (Modbus 1st version)	Registers (ModbusRTU)	
2000	2001	Control ON / OFF
5004	5005	Room Set Point Day
5005	5006	Room Set Point Night
10002	10003	Room Temperature
10102	10103	Humidity
10202	10203	External Temperature Sensor
2003	2004	Present Fan Stage
10301	10302	Digital Input 1
10401	10402	Digital Input 2
2007	2008	Heat Symbol
2008	2009	Cool Symbol
2001	2002	Occupied (1) / Unoccupied (0)
1030	1031	Time (hour)
1031	1032	Time (minute)
1032	1033	Time (second)

Points (ModbusRTU only. Modbus 1st version: Read variables)

```
2B>p room_setpoint_day
Room_Setpoint_Day     =        235     // set point * 10          R/W

2B>p room_temperature
Room_Temperature      =        192     // temperature * 10        R

2B>p fan_stage
Fan_Stage             =          3     // fan stage 3             R/W

2B>p heat_symbol
Heat_Symbol           =          1     // show heating symbol     R/W

2B>p occupied_symbol
Occupied_Symbol       =          1     // show occupied symbol    R/W

2B>p time_hh
Time_hh               =         10     // hour                    R/W

2B>p time_mm
Time_mm               =         14     // minute                  R/W

2B>p time_ss
Time_ss               =         41     // second                  R/W
```

19.2°C
FAN2
Heating Symbol
Select fan stage. After 30 seconds the display returns to set point.

ModbusRTU

RoomUnit::(Modbus RTU Master)

Slave address: 1
Read interval: 5
Max read datapoints: 10
Max write datapoints: 1

Discrete inputs | Coils | Input registers | Holding registers

RCO datapoint	Start register	Type	Little endian byte ordering	Little endian word ordering	Read enable	Read interval	Write enable	Write interval
Bus_Address	1004	Uint-16	☐	☐	☑	-1	☑	0
Bus_Baudrate	1005	Uint-16	☐	☐	☑	-1	☑	0
Function	1009	Uint-16	☐	☐	☑	-1	☑	0
Occupied_Change	1012	Uint-16	☐	☐	☑	-1	☑	0
Idle_Timeout	1017	Uint-16	☐	☐	☑	-1	☑	0
Idle_Enabled	1018	Uint-16	☐	☐	☑	-1	☑	0
Time_hh	1031	Sint-16	☐	☐	☑	-1	☑	0
Time_mm	1032	Sint-16	☐	☐	☑	-1	☑	0
Time_ss	1033	Sint-16	☐	☐	☑	-1	☑	0
Equipment_Mode	2001	Uint-16	☐	☐	☑	-1	☑	0
Operation_Mode	2002	Uint-16	☐	☐	☑	-1	☑	0
Fan_Stage	2004	Uint-16	☐	☐	☑	-1	☑	0
Fan_Symbol	2005	Uint-16	☐	☐	☑	-1	☑	0
Heat_Symbol	2008	Uint-16	☐	☐	☑	-1	☑	0
Cool_Symbol	2009	Uint-16	☐	☐	☑	-1	☑	0
Occupied_Symbol	2010	Uint-16	☐	☐	☑	-1	☑	0
Unoccupied_Symbol	2011	Uint-16	☐	☐	☑	-1	☑	0
TextOFF1	3005	Uint-16	☐	☐	☑	-1	☑	0
TextOFF2	3006	Uint-16	☐	☐	☑	-1	☑	0
TextOFF3	3007	Uint-16	☐	☐	☑	-1	☑	0
TextOFF4	3008	Uint-16	☐	☐	☑	-1	☑	0
Large_Chars_Idle	4001	Uint-16	☐	☐	☑	-1	☑	0
Small_Chars_Idle	4002	Uint-16	☐	☐	☑	-1	☑	0
Large_Characters	5001	Uint-16	☐	☐	☑	-1	☑	0
Units_Displayed	5003	Uint-16	☐	☐	☑	-1	☑	0
Small_Characters	5004	Uint-16	☐	☐	☑	-1	☑	0
Room_Setpoint_Day	5005	Sint-16	☐	☐	☑	-1	☑	0
Room_Setpoint_Night	5006	Uint-16	☐	☐	☑	-1	☑	0
Setpoint_Step	5007	Sint-16	☐	☐	☑	-1	☑	0
Setpoint_LL	5008	Sint-16	☐	☐	☑	-1	☑	0
Setpoint_UL	5009	Sint-16	☐	☐	☑	-1	☑	0
Vertical_Bar	5010	Uint-16	☐	☐	☑	-1	☑	0
Int_Sensor_Enabled	10001	Uint-16	☐	☐	☑	-1	☑	0
Int_Sensor_Status	10002	Uint-16	☐	☐	☑	-1	☐	
Int_Sensor_Value	10003	Sint-16	☐	☐	☑	-1	☐	
Int_Sensor_Offset	10004	Sint-16	☐	☐	☑	-1	☑	0
Humidity_Enabled	10101	Uint-16	☐	☐	☑	-1	☑	0
Humidity_Status	10102	Uint-16	☐	☐	☑	-1	☐	
Humidity_Value	10103	Sint-16	☐	☐	☑	-1	☐	
Humidity_Offset	10104	Sint-16	☐	☐	☑	-1	☑	0
Ext_Sensor_Enabled	10201	Uint-16	☐	☐	☑	-1	☑	0
Ext_Sensor_Status	10202	Uint-16	☐	☐	☑	-1	☐	
Ext_Sensor_Value	10203	Sint-16	☐	☐	☑	-1	☐	
Ext_Sensor_Offset	10204	Sint-16	☐	☐	☑	-1	☑	0
Digital_1	10302	Uint-16	☐	☐	☑	-1	☐	
Digital_2	10402	Uint-16	☐	☐	☑	-1	☐	
FanString11	11001	Uint-16	☐	☐	☑	-1	☑	0
FanString12	11002	Uint-16	☐	☐	☑	-1	☑	0
FanString13	11003	Uint-16	☐	☐	☑	-1	☑	0
FanString14	11004	Uint-16	☐	☐	☑	-1	☑	0
FanString21	11005	Uint-16	☐	☐	☑	-1	☑	0
FanString22	11006	Uint-16	☐	☐	☑	-1	☑	0
FanString23	11007	Uint-16	☐	☐	☑	-1	☑	0
FanString24	11008	Uint-16	☐	☐	☑	-1	☑	0
FanString31	11009	Uint-16	☐	☐	☑	-1	☑	0
FanString32	11010	Uint-16	☐	☐	☑	-1	☑	0
FanString33	11011	Uint-16	☐	☐	☑	-1	☑	0
FanString34	11012	Uint-16	☐	☐	☑	-1	☑	0
FanString41	11013	Uint-16	☐	☐	☑	-1	☑	0
FanString42	11014	Uint-16	☐	☐	☑	-1	☑	0
FanString43	11015	Uint-16	☐	☐	☑	-1	☑	0
FanString44	11016	Uint-16	☐	☐	☑	-1	☑	0

ELESTA building automation

Modbus 1st version

RoomUnit1:15:COM4 (Modbus)

Name:		Handshake:	None
Port:	COM4	Echo:	☐
Baudrate:	19200	Prompt:	☑
Data Bits:	8	Protocol:	☐
Parity:	Even	Muteerror:	☐
Stop Bits:	1		

FC 03 ↓ FC 06 / Off ↓

Name	Slave Address	Point Address	Registers Count	Read Function	Write Function	Modbus Type	Info
Bus_Address	1	1003	1	Read Multiple Register	Write Single Register	UINT16	1 ... 255
Bus_Baudrate	1	1004	1	Read Multiple Register	Write Single Register	UINT16	0, 1, 2, 3, 4
Function	1	1008	1	Read Multiple Register	Write Single Register	UINT16	0, 1
Occupied_Change	1	1011	1	Read Multiple Register	Write Single Register	UINT16	0, 1
Idle_Timeout	1	1016	1	Read Multiple Register	Write Single Register	UINT16	Seconds
Idle_Enabled	1	1017	1	Read Multiple Register	Write Single Register	UINT16	0, 1
Time_hh	1	1030	1	Read Multiple Register	Write Single Register	SINT16	0 ... 23
Time_mm	1	1031	1	Read Multiple Register	Write Single Register	SINT16	0 ... 59
Time_ss	1	1032	1	Read Multiple Register	Write Single Register	SINT16	0 ... 59
Equipment_Mode	1	2000	1	Read Multiple Register	Write Multiple Regis...	UINT16	0,1
Operation_Mode	1	2001	1	Read Multiple Register	Write Single Register	UINT16	0, 1
Fan_Stage	1	2003	1	Read Multiple Register	Write Single Register	UINT16	0, 1, 2, 3
Fan_Symbol	1	2004	1	Read Multiple Register	Write Single Register	UINT16	0, 1
Heat_Symbol	1	2007	1	Read Multiple Register	Write Single Register	UINT16	0, 1
Cool_Symbol	1	2008	1	Read Multiple Register	Write Single Register	UINT16	0, 1
Occupied_Symbol	1	2009	1	Read Multiple Register	Write Single Register	UINT16	0, 1
Unoccupied_Symbol	1	2010	1	Read Multiple Register	Write Single Register	UINT16	0, 1
TextOFF1	1	3004	1	Read Multiple Register	Write Single Register	UINT16	ASCII
TextOFF2	1	3005	1	Read Multiple Register	Write Single Register	UINT16	ASCII
TextOFF3	1	3006	1	Read Multiple Register	Write Single Register	UINT16	ASCII
TextOFF4	1	3007	1	Read Multiple Register	Write Single Register	UINT16	ASCII
Large_Chars_Idle	1	4000	1	Read Multiple Register	Write Single Register	UINT16	0 ... 18
Small_Chars_Idle	1	4001	1	Read Multiple Register	Write Single Register	UINT16	0 ... 18
Large_Characters	1	5000	1	Read Multiple Register	Write Single Register	UINT16	0, 1, 2, 3, 4, 5, 6, 7, 8, 9
Units_Displayed	1	5002	1	Read Multiple Register	Write Single Register	UINT16	0, 1, 2, 3
Small_Characters	1	5003	1	Read Multiple Register	Write Single Register	UINT16	0, 1, 2, 3, 4, 5, 6, 7, 8, 9
Room_Setpoint_Day	1	5004	1	Read Multiple Register	Write Single Register	SINT16	e.g. 205 (20.5)
Room_Setpoint_Night	1	5005	1	Read Multiple Register	Write Single Register	SINT16	e.g. 180 (18.0)
Setpoint_Step	1	5006	1	Read Multiple Register	Write Single Register	SINT16	e.g. 5 (0.5)
Setpoint_LL	1	5007	1	Read Multiple Register	Write Single Register	SINT16	e.g. 160 (16.0)
Setpoint_UL	1	5008	1	Read Multiple Register	Write Single Register	SINT16	e.g. 300 (30.0)
Vertical_Bar	1	5009	1	Read Multiple Register	Write Single Register	UINT16	0 ... 100
Int_Sensor_Enabled	1	10000	1	Read Multiple Register	Write Single Register	UINT16	0, 1
Int_Sensor_Status	1	10001	1	Read Multiple Register	Off	UINT16	0, 1
Int_Sensor_Value	1	10002	1	Read Multiple Register	Off	SINT16	e.g. 214 (21.4)
Int_Sensor_Offset	1	10003	1	Read Multiple Register	Write Single Register	SINT16	-127 ... 127 (-12.7 ... 12.7)
Humidity_Enabled	1	10100	1	Read Multiple Register	Write Single Register	UINT16	0, 1
Humidity_Status	1	10101	1	Read Multiple Register	Off	UINT16	0, 1
Humidity_Value	1	10102	1	Read Multiple Register	Off	SINT16	e.g. 436 (43.6)
Humidity_Offset	1	10103	1	Read Multiple Register	Write Single Register	SINT16	-127 ... 127 (-12.7 ... 12.7)
Ext_Sensor_Enabled	1	10200	1	Read Multiple Register	Write Single Register	UINT16	0, 1
Ext_Sensor_Status	1	10201	1	Read Multiple Register	Off	UINT16	0, 1
Ext_Sensor_Value	1	10202	1	Read Multiple Register	Off	SINT16	e.g. 231 (23.1)
Ext_Sensor_Offset	1	10203	1	Read Multiple Register	Write Single Register	SINT16	-127 ... 127 (-12.7 ... 12.7)
Digital_1	1	10301	1	Read Multiple Register	Off	UINT16	0, 1
Digital_2	1	10401	1	Read Multiple Register	Off	UINT16	0, 1
FanString11	1	11000	1	Read Multiple Register	Write Single Register	UINT16	ASCII
FanString12	1	11001	1	Read Multiple Register	Write Single Register	UINT16	ASCII
FanString13	1	11002	1	Read Multiple Register	Write Single Register	UINT16	ASCII
FanString14	1	11003	1	Read Multiple Register	Write Single Register	UINT16	ASCII
FanString21	1	11004	1	Read Multiple Register	Write Single Register	UINT16	ASCII
FanString22	1	11005	1	Read Multiple Register	Write Single Register	UINT16	ASCII
FanString23	1	11006	1	Read Multiple Register	Write Single Register	UINT16	ASCII
FanString24	1	11007	1	Read Multiple Register	Write Single Register	UINT16	ASCII
FanString31	1	11008	1	Read Multiple Register	Write Single Register	UINT16	ASCII
FanString32	1	11009	1	Read Multiple Register	Write Single Register	UINT16	ASCII
FanString33	1	11010	1	Read Multiple Register	Write Single Register	UINT16	ASCII
FanString34	1	11011	1	Read Multiple Register	Write Single Register	UINT16	ASCII
FanString41	1	11012	1	Read Multiple Register	Write Single Register	UINT16	ASCII
FanString42	1	11013	1	Read Multiple Register	Write Single Register	UINT16	ASCII
FanString43	1	11014	1	Read Multiple Register	Write Single Register	UINT16	ASCII
FanString44	1	11015	1	Read Multiple Register	Write Single Register	UINT16	ASCII

Occupied Symbol

❄	Cooling Symbol
☀	Heating Symbol
🕘	Time Symbol
▲	Alarm Symbol
👆	Override Symbol
🏠	Unoccupied Symbol
Err1	Bus Communication Error
Err2	The selected sensor is damaged or missing
NA	The selected sensor is not enabled
No	The modification of the value is not enabled

ELESTA
building automation

ModbusRTU Registers (Modbus 1st version: address - 1, FC 03 / FC 06)

Address	Type	R/W	Meaning	Possible Values (**Default**) (ELESTA)
1004 (1003)	UINT16	R/W	Bus Address	**1** – 247 (max. 32 devices per controller)
1005 (1004)	UINT16	R/W	Baud Rate	**0: 19200** 1: 4800 2: 9600 3: 19200 4: 38400
1009 (1008)	UINT16	R/W	Function	0: With fan **1: Without fan**
1012 (1011)	UINT16	R/W	Occupied / Unoccupied change enabled	**0: Disabled** 1: Enabled
1017 (1016)	UINT16	R/W	Idle Timeout	Seconds (30)
1018 (1017)	UINT16	R/W	Idle Freigabe	**0: Disabled** 1: Enabled
1031 (1030)	SINT16	R/W	Time (Hour)	0 … 23
1032 (1031)	SINT16	R/W	Time (Minute)	0 … 59
1033 (1032)	SINT16	R/W	Time (Second)	0 … 59

Address	Type	R/W	Meaning	Possible Values (**Default**) (ELESTA)
2001 (2000)	UINT16	R/W	Equipment Mode	0: OFF **1: ON**
2002 (2001)	UINT16	R/W	Operation Mode	0: Unoccupied **1: Occupied**
2004 (2003)	UINT16	R/W	Fan Stage	0: Auto 1: Stage 1 2: Stage 2 3: Stage 3
2005 (2004)	UINT16	R/W	Fan Symbol	**0: Hide symbol** 1: Show symbol
2006 (2005)	UINT16	R/W	Alarm Symbol	**0: Hide symbol** 1: Show symbol
2006 (2005)	UINT16	R/W	Alarm String	**0: Hide string** 1: Show string
2008 (2007)	UINT16	R/W	Heating Symbol	**0: Hide symbol** 1: Show symbol
2009 (2008)	UINT16	R/W	Cooling Symbol	**0: Hide symbol** 1: Show symbol
2010 (2009)	UINT16	R/W	Occupied Symbol	**0: Hide symbol** 1: Show symbol
2011 (2010)	UINT16	R/W	Unoccupied Symbol	**0: Hide symbol** 1: Show symbol
2012 (2011)	UINT16	R/W	Arrow Symbol	**0 … 10**
2013 (2012)	UINT16	R/W	Text Alarm Character 1	**32** " " 32 " "
2014 (2013)	UINT16	R/W	Text Alarm Character 2	**65** "**A**" 65 "A"
2015 (2014)	UINT16	R/W	Text Alarm Character 3	**76** "**L**" 76 "L"
2016 (2015)	UINT16	R/W	Text Alarm Character 4	**65** "**A**" 65 "A"
2017 (2016)	UINT16	R/W	Display Alarm String	0: do not display 1: large Characters **2: small Characters**
2018 (2017)	UINT16	R/W	Time Symbol	**0: Hide symbol** 1: Show symbol
2019 (2018)	UINT16	R/W	Override Symbol	**0: Hide symbol** 1: Show symbol

Display in OFF mode (Key pressed)				
Address	Type	R/W	Meaning	Possible Values (**Default**) (ELESTA)
3001 (3000)	UINT16	R/W	Large Characters in OFF Mode (upper)	**0: Display nothing** 1: - 2: Value 3: Set Point 4: - 5: - 6: - 7: - 8: - 9: - 10: - 11: - 12: Time 13: Alarm Text 14: Internal Temperature Sensor 15: External Temperature Sensor 16: Humidity 17: Digital Input 1 18: Digital Input 2
3002 (3001)	UINT16	R/W	Small Characters in OFF Mode (lower)	0: Display nothing **1: Text String OFF** 2: Value 3: Set Point 4: - 5: - 6: - 7: - 8: - 9: - 10: - 11: - 12: Time 13: Alarm Text 14: Internal Temperature Sensor 15: External Temperature Sensor 16: Humidity 17: Digital Input 1 18: Digital Input 2

Address	Type	R/W	Meaning	Possible Values (**Default**) (ELESTA)
3003 (3002)	UINT16	R/W	Vertical Bar	**0:** **Empty** 1: 10 % 2: 20 % 3: 30 % 4: 40 % 5: 50 %
3004 (3003)	UINT16	R/W	Status of the symbols in OFF mode	**Bit** **Default** 0: Fan 0 1: Alarm 1 2: Heating / Cooling 1 3: Occupied / Not Occupied 0 4: Arrows 1
3005 (3004)	UINT16	R/W	Text OFF Character 1	**32** " " 32 " "
3006 (3005)	UINT16	R/W	Text OFF Character 2	**79** "**O**" 79 "O"
3007 (3006)	UINT16	R/W	Text OFF Character 3	**70** "**F**" 70 "F"
3008 (3007)	UINT16	R/W	Text OFF Character 4	**70** "**F**" 70 "F"

Display in Idle mode				
Address	Type	R/W	Meaning	Possible Values (**Default**) (ELESTA)
4001 (4000)	UINT16	R/W	Large Characters Idle Mode (upper)	0: Display nothing 1: - **2: Value** 3: Set point 4: - 5: - 6: - 7: - 8: - 9: - 10: - 11: - 12: Clock 13: Alarm text 14: Internal temperature sensor 15: External temperature sensor 16: Humidity value 17: Digital input 1 18: Digital input 2
4002 (4001)	UINT16	R/W	Small Characters Idle Mode (lower)	0: Display nothing 1: - 2: Value **3: Set point** 4: - 5: - 6: - 7: - 8: - 9: - 10: - 11: - 12: Clock 13: Alarm text 14: Internal temperature sensor 15: External temperature sensor 16: Humidity value 17: Digital input 1 18: Digital input 2
4003 (4002)	UINT16	R/W	Vertical Bar	0: Empty **1: 10 %** 2: 20 % 3: 30 % 4: 40 % 5: 50 %

Address	Type	R/W	Meaning	Possible Values (**Default**) (ELESTA)
4004 (4004)	UINT16	R/W	Text ON Character 1	**32** " "
4005 (4005)	UINT16	R/W	Text ON Character 2	**79** "**O**"
4006 (4006)	UINT16	R/W	Text ON Character 3	**78** "**N**"
4007 (3007)	UINT16	R/W	Text ON Character 4	**32** " "

Display in operation mode				
Address	Type	R/W	Meaning	Possible Values (**Default**) (ELESTA)
5001 (5000)	UINT16	R/W	Large Characters (upper)	0: Display nothing 1: - **2: Value** 3: Set point 4: - 5: Internal temperature sensor 6: External temperature sensor 7: Humidity value 8: Digital input 1 9: Digital input 2
5003 (5002)	UINT16	R/W	Unit to be displayed	0: - 1: % **2: °C** 3: Pa
5004 (5003)	UINT16	R/W	Small Characters (lower)	0: Display nothing 1: - 2: Value **3: Set point** 4: - 5: Internal temperature sensor 6: External temperature sensor 7: Humidity value 8: Digital input 1 9: Digital input 2
5005 (5004)	SINT16	R/W	Day Set Point	**20** (Enter: 200). 16.0 … 30.0
5006 (5005)	SINT16	R/W	Night Set Point	**20** (Enter: 200). 16.0 … 30.0
5007 (5006)	SINT16	R/W	Set Point Steps	0.1, **0.5**, 1.0, 2.0, 5.0 (Enter: 5)
5008 (5007)	SINT16	R/W	Set Point Lower Limit	**16.0** (Enter: 160)
5009 (5008)	SINT16	R/W	Set Point Upper Limit	**30.0** (Enter: 300)
5010 (5009)	UINT16	R/W	Vertical Bar (right hand side)	0 … 10 (Enter: 0 … 100)

Address	Type	R/W	Meaning	Possible Values (**Default)** (ELESTA)
5011 (5010)	UINT16	R/W	Text LP1 / St1 Character 1	**32** " " 32 " "
5012 (5011)	UINT16	R/W	Text LP1/ St1 Character 2	**76** "**L**" 83 "S"
5013 (5012)	UINT16	R/W	Text LP1/ St1 Character 3	**80** "**P**" 116 "T"
5014 (5013)	UINT16	R/W	Text LP1/ St1 Character 4	**49** "**1**" 49 "1"

Address	Type	R/W	Meaning	Possible Values (**Default**) (ELESTA)
10001 (10000)	UINT16	R/W	Internal Temperature Sensor	0: Sensor disabled **1: Sensor enabled**
10002 (10001)	UINT16	R	Sensor Status	0: OK 1: Error
10003 (10002)	SINT16	R	Sensor Value	Temperature (e.g. 15.7 °C - Displayed: 157)
10004 (10003)	SINT16	R/W	Sensor Offset	-12.7 … **0** … 12.7 °C (Enter: 127)
10101 (10100)	UINT16	R/W	Humidity Sensor	**0: Sensor disabled** 1: Sensor enabled
10102 (10101)	UINT16	R	Sensor Status	0: OK 1: Error
10103 (10102)	SINT16	R	Sensor Value	Humidity (e.g. 45.3 % - Displayed: 453)
10104 (10103)	SINT16	R/W	Sensor Offset	-12.7 … **0** … 12.7 % (Enter: 127)
10201 (10200)	UINT16	R/W	External Temperature Sensor	**0: Sensor disabled** 1: Sensor enabled
10202 (10201)	UINT16	R	Sensor Status	0: OK 1: Error
10203 (10202)	SINT16	R	Sensor Value	Temperature (e.g. 15.7 °C - Displayed: 157)
10204 (10203)	SINT16	R/W	Sensor Offset	-12.7 … **0** … 12.7 °C (Enter: 127)
10301 (10300)	UINT16	R/W	Binary Input 1	**0: Normal digital mode** 1: Window contact 2: Motion detector
10302 (10301)	UINT16	R	Input 1 Value	0, 1
10401 (10400)	UINT16	R/W	Binary Input 2	**0: Normal digital mode** 1: Window contact 2: Motion detector
10402 (10401)	UINT16	R	Input 2 Value	0, 1

Address	Type	R/W	Meaning	Possible Values (**Default**) (ELESTA)
11001 (11000)	UINT16	R/W	Fan String 1 Character 1	**65** "**A**"
11002 (11001)	UINT16	R/W	Fan String 1 Character 2	**117** "**u**"
11003 (11002)	UINT16	R/W	Fan String 1 Character 3	**116** "**t**"
11004 (11003)	UINT16	R/W	Fan String 1 Character 4	**111** "**o**"
				"**Auto**" "Auto"
11005 (11004)	UINT16	R/W	Fan String 2 Character 1	**70** "**F**" 83 "S"
11006 (11005)	UINT16	R/W	Fan String 2 Character 2	**65** "**A**" 116 "t"
11007 (11006)	UINT16	R/W	Fan String 2 Character 3	**78** "**N**" 32 " "
11008 (11007)	UINT16	R/W	Fan String 2 Character 4	**49** "**1**" 49 "1"
				"**FAN1**" "St 1"
11009 (11008)	UINT16	R/W	Fan String 3 Character 1	**70** "**F**" 83 "S"
11010 (11009)	UINT16	R/W	Fan String 3 Character 2	**65** "**A**" 116 "t"
11011 (11010)	UINT16	R/W	Fan String 3 Character 3	**78** "**N**" 32 " "
11012 (11011)	UINT16	R/W	Fan String 3 Character 4	**50** "**2**" 50 "2"
				"**FAN2**" "St 2"
11013 (11012)	UINT16	R/W	Fan String 4 Character 1	**70** "**F**" 83 "S"
11014 (11013)	UINT16	R/W	Fan String 4 Character 2	**65** "**A**" 116 "t"
11015 (11014)	UINT16	R/W	Fan String 4 Character 3	**78** "**N**" 32 " "
11016 (11015)	UINT16	R/W	Fan String 4 Character 4	**51** "**3**" 51 "3"
				"**FAN3**" "St 3"

Reduced ASCII table for the 7-segment display

ASCII	Character		ASCII	Character		ASCII	Character
32	Space		65	A		98	b
45	-		66	B		99	c
48	0		67	C		100	d
49	1		69	E		103	g
50	2		70	F		104	h
51	3		72	H		108	l
52	4		73	I		110	n
53	5		76	L		111	o
54	6		78	N		112	p
55	7		79	O		113	q
56	8		80	P		114	r
57	9		83	S		116	t
			85	U		117	u
			95	_		121	y

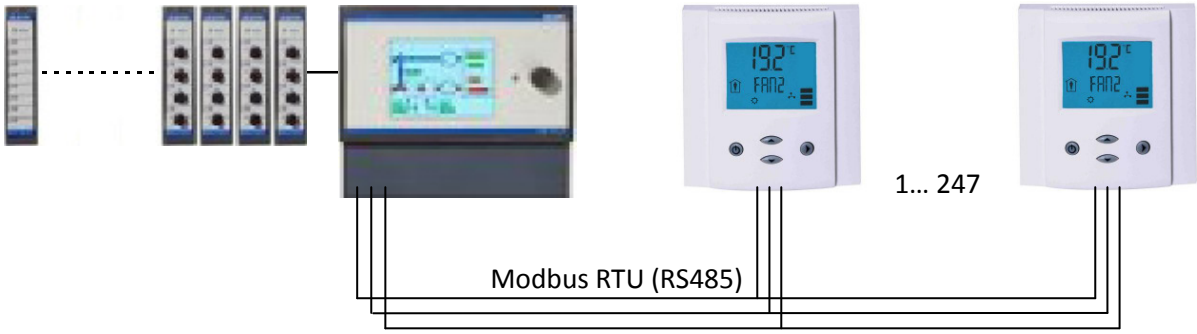

Manually Configuration Of The Device Address

Press simultaneously until

appears on the display.

Press

---

appears on the display.

Press the UP button until

is displayed.

Press

---

appears on the display (address 01).

Press - three triangles appear at the bottom of the screen.

Use the UP and DOWN buttons to set the address (01 … 32).

Press The settings were saved

Press to finish address setting.